CITY OF NORTH TONAWANDA, NEW YORK
GRATWICK RIVERSIDE PARK MARINA
2016 RENOVATIONS

JUNE, 2016

PROJECT No. 2016-10

Mayor
ARTHUR G. PAPPAS

Common Council President
PHILIP RIZZO (IST WARD ALDERMAN)

Common Council
CATHY SCHWANDT (ALDERMAN-AT-LARGE)
ROBERT PECORARO (ALDERMAN-AT-LARGE)
DONNA L. BRAUN (2ND WARD ALDERMAN)
ERIC M. ZADZILKA (3RD WARD ALDERMAN)

City Clerk / Treasurer
DANIEL R. QUINN

City Attorney
KATHERINE D. ALEXANDER

City Engineer
DALE W. MARSHALL, P.E.

Superintendent
Department of Public Works
BRADLEY ROWLES

NUSSBAUMER & CLARKE, INC.
A CORPORATION REGISTERED TO PRACTICE
PROFESSIONAL ENGINEERING & LAND SURVEYING
IN THE STATE OF NEW YORK
CERTIFICATE NO. 027

Nussbaumer & Clarke, Inc.
ENGINEERS AND SURVEYORS
3556 LAKE SHORE ROAD
BUFFALO, NY 14219-1494
(716) 827-8000 PHONE
(716) 826-7958 FAX

15J1-0185 SHEET 1 of 14

I:\2015\15J1-0185 gratwick marina\08b working drawings\Discipline\G-General\GENERAL COVER & NOTES.dwg
6/13/2016 FTALLARICO

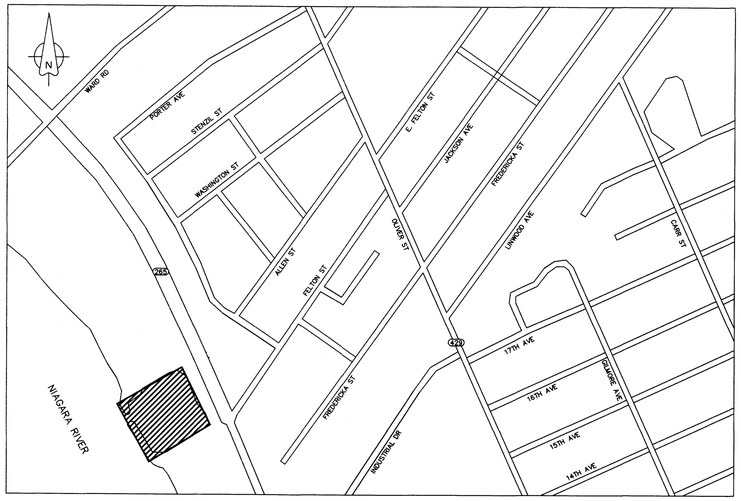

PROJECT LOCATION

GRATWICK MARINA SITE
CITY OF NORTH TONAWANDA
LOCATION MAP
NO SCALE

SHEET LIST TABLE	
SHEET NUMBER	SHEET TITLE
G-001	General Cover Sheet
G-002	GENERAL LOCATION MAP INDEX OF DRAWINGS & GENERAL NOTES
C-101	CIVIL EXISTING AND DEMOLITION SITE PLAN
C-102	CIVIL PROPOSED SITE PLAN
S-501	STRUCTURAL DETAILS
S-502	STRUCTURAL DETAILS
P-101	PLUMBING PROPOSED SITE PLAN
P-501	PLUMBING DETAILS, SCHEDULE, AND NOTES
E-101	ELECTRICAL SPECIFICATIONS, SCHEDULES, AND SITE PLAN
E-102	ELECTRICAL EXISTING SITE PLAN
E-103	ELECTRICAL PROPOSED SITE PLAN
E-104	ELECTRICAL SITE LIGHT PHOTOMETRICS
E-501	ELECTRICAL DETAILS
E-601	ELECTRICAL ONE LINE, PANEL SCHEDULES, AND DETAILS

GENERAL NOTES:

1. CONSTRUCTION AND MATERIALS SPECIFICATIONS AS NOTED IN THE ATTACHED BID PROPOSAL SPECIFICATIONS.
2. THE CONTRACTOR'S ATTENTION IS DIRECTED TO THE FACT THAT DUE TO THE NATURE OF RECONSTRUCTION PROJECTS, THE EXACT EXTENT OF RECONSTRUCTION WORK CAN NOT ALWAYS BE ACCURATELY DETERMINED PRIOR TO THE COMMENCEMENT OF WORK. THE CONTRACT DOCUMENTS HAVE BEEN PREPARED BASED ON A FIELD INSPECTION, SURVEY DATA AND OTHER MATERIAL AVAILABLE AT THE TIME. ACTUAL FIELD CONDITIONS MAY REQUIRE MODIFICATIONS TO THE DESIGN DETAILS AND WORK QUANTITIES. THE CONTRACTOR SHALL PERFORM THE WORK A.O.B.E. IN ACCORDANCE WITH THE FIELD CONDITION. THERE WILL BE NO CLAIM AGAINST THE ENGINEER OR THE CITY FOR ADDITIONS AND MODIFICATIONS.
3. THE CONTRACTOR SHOULD NOTE THAT ADDITIONAL WORK MAY BE REQUIRED AS THE WORK PROGRESSES WHICH IS NOT SHOWN OR NOTED ON THE PLANS. THE WORK SHALL BE PERFORMED BY THE CONTRACTOR A.O.B.E. AND PAYMENT SHALL BE MADE AS A CHANGE ORDER TO THE CONTRACT.
4. THE CONTRACTOR SHALL VISIT THE SITE PRIOR TO PREPARING THE BID PROPOSAL IN ORDER TO FAMILIARIZE HIMSELF WITH THE EXISTING CONDITIONS AND MAGNITUDE OF WORK TO BE PERFORMED.
5. ALL SHOP DRAWINGS AND MATERIAL SUBMITTALS FOR THIS PROJECT SHALL BE SUBMITTED IN ENGLISH UNITS.
6. IT SHALL BE THE CONTRACTOR'S OBLIGATION AND RESPONSIBILITY TO USE METHODS AND EQUIPMENT THAT WILL ENSURE THE SATISFACTORY COMPLETION OF THE WORK WITHIN THE REQUIRED TIME FRAME.
7. THE CONTRACTOR IS ADVISED THAT ADDITIONAL NOTES WILL BE FOUND ON SUBSEQUENT SHEETS OF THE CONTRACT PLANS AND CONTRACT PROPOSAL AND SUCH NOTES, WHILE PERTAINING TO SPECIFIC DRAWINGS THAT THEY ARE PLACED ON, ALSO SUPPLEMENT THE GENERAL NOTES LISTED HEREIN AND IN THE CONTRACT PROPOSAL.
8. NO PAYMENT WILL BE MADE FOR WORK CALLED FOR BY NOTES ON THE PLANS AND CONTRACT PROPOSAL UNDER THE HEADING OF "GENERAL NOTES" UNLESS PAYMENT IS SPECIFICALLY INDICATED BY AN ITEM NUMBER. THE COST OF WORK FOR WHICH NO PAYMENT IS INDICATED SHALL BE INCLUDED IN THE LUMP SUM BID FOR THE CONTRACT.
9. WHENEVER ITEMS IN THE CONTRACT REQUIRE MATERIAL TO BE REMOVED AND DISPOSED OF, THE COST OF SUPPLYING THE DISPOSAL AREA, PERMITS RELATED TO DISPOSAL, AND TRANSPORTATION TO THAT AREA SHALL BE INCLUDED IN THE UNIT PRICES BID FOR THE CONTRACT.
10. THE COST OF WATER FOR THE COMPACTION OF FILLS SHALL BE INCLUDED IN THE UNIT PRICES BID FOR THE CONTRACT.
11. THE COST OF WATER FOR THE ESTABLISHMENT OF TURF SHALL BE INCLUDED IN THE UNIT PRICES BID FOR THE CONTRACT.
12. THE COST OF ALL JOINT MATERIALS SHALL BE INCLUDED IN THE UNIT PRICES BID FOR THE CONTRACT.
13. WORK TO BE PERFORMED UNDER THIS CONTRACT DOES NOT REQUIRE THE DISTURBING, DESTRUCTION OR REMOVAL OF ANY KNOWN MATERIALS CONTAINING ASBESTOS OR OTHER HAZARDOUS MATERIALS. SHOULD THESE MATERIALS BE DISCOVERED DURING THE COURSE OF CONSTRUCTION, THE CONTRACTOR SHALL CONTACT THE ENGINEER AND/OR THE OWNER TO OBTAIN DIRECTION AS HOW TO PROCEED.
14. THE CONTRACTOR SHALL PERFORM ALL WORK WITH CARE SO THAT ANY MATERIALS THAT ARE TO REMAIN IN PLACE OR ARE TO REMAIN THE PROPERTY OF THE OWNER WILL NOT BE DAMAGED. IF THE CONTRACTOR DAMAGES ANY MATERIALS THAT ARE TO REMAIN IN PLACE OR ARE TO REMAIN THE PROPERTY OF THE OWNER, THEY SHALL BE REPAIRED OR REPLACED IN A MANNER THAT IS SATISFACTORY TO THE OWNER AT THE CONTRACTOR'S EXPENSE.
15. THE LOCATION OF UTILITIES, PUBLIC AND/OR PRIVATE, SHOWN ON THE PLANS ARE APPROXIMATE ONLY, BASED ON CONTACT WITH UTILITY OWNERS AND AGENCIES. THE CONTRACTOR SHALL LOCATE ALL ABOVE GROUND AND UNDERGROUND UTILITIES AND NOTIFY THE UTILITY OWNERS OR AGENCIES PRIOR TO COMMENCING CONSTRUCTION ACTIVITIES.
16. THE CONTRACTOR SHALL PROTECT EXISTING UTILITIES THAT ARE TO REMAIN IN PLACE DURING CONSTRUCTION. ANY DAMAGES CAUSED TO UTILITIES THAT ARE DETERMINED IN THE OPINION OF THE ENGINEER TO BE DUE TO THE CONTRACTOR'S NEGLIGENCE SHALL BE REPAIRED TO THE OWNER'S SATISFACTION AT THE CONTRACTOR'S EXPENSE.
17. THE CONTRACTOR SHALL RESET ALL DAMAGED SURVEY PROPERTY PINS AND SUBMIT CERTIFICATIONS OF ACCURACY BY A LICENSED LAND SURVEYOR REGISTERED IN THE STATE OF NEW YORK.
18. DETAILS ON THE DRAWINGS LABELED "NOT TO SCALE", "N.T.S.", ARE INTENTIONALLY DRAWN NOT TO SCALE FOR VISUAL CLARITY. ALL OTHER DETAILS THAT ARE LABELED FOR SCALE ARE DRAWN PROPORTIONALLY AND ARE FULLY DIMENSIONED.

EROSION AND SEDIMENT CONTROL NOTES:

1. DURING THE COURSE OF CONSTRUCTION, THE CONTRACTOR SHALL CONDUCT OPERATION IN SUCH A MANNER AS TO PREVENT OR REDUCE TO A MINIMUM ANY DAMAGE TO THE RIVER FROM POLLUTION BY DEBRIS, SEDIMENT, OR OTHER FOREIGN MATERIAL OR FROM MANIPULATION OF EQUIPMENT AND/OR MATERIALS IN OR NEAR SUCH RIVERS. THE CONTRACTOR SHALL NOT RETURN DIRECTLY TO THE RIVER ANY WATER WHICH HAS BEEN USED FOR WASH PURPOSES OR OTHER SIMILAR OPERATION WHICH CAUSE THIS WATER TO BECOME POLLUTED WITH SAND, SILT, CEMENT, OIL, OR OTHER IMPURITIES. IF THE CONTRACTOR USES WATER FROM A RIVER, THE CONTRACTOR SHALL CONSTRUCT AN INTAKE OR TEMPORARY DAM REQUIRED TO PROTECT AND MAINTAIN WATER RIGHTS AND TO SUSTAIN FISH LIFE DOWNSTREAM.
2. VISIBLY TURBID DISCHARGES FROM DEWATERING OPERATIONS OR EXCAVATION ACTIVITIES SHALL NOT BE ALLOWED TO ENTER THE RIVER. ANY SUCH DISCHARGE SHALL BE (1) RETAINED IN AN APPROPRIATELY MAINTAINED UPLAND SETTLING BASIN, OR (2) FILTERED THROUGH CRUSHED STONE, SAND, STRAW BALES, OR SILT SCREENING, AS APPROVED BY THE ENGINEER.
3. GRASSED AREAS DISTURBED BY THE CONTRACTOR, AS PART OF THE WORK TO BE PERFORMED UNDER THIS CONTRACT, SHALL BE RESTORED AS SPECIFIED, TO THE SATISFACTION OF THE OWNER. ALL DISTURBED GRASS AREAS SHALL BE GRADED, TOPSOILED, AND SEEDED IN A MANNER SATISFACTORY TO THE OWNER. DISTURBED AREAS BEYOND THE GRADING LIMITS SHOWN ON THE DRAWINGS SHALL BE RESTORED AS NOTED ABOVE AT NO ADDITIONAL COST TO THE OWNER.
4. CARE SHALL BE TAKEN TO RETAIN NATURAL GROWTH AND PREVENT DAMAGE TO TREES WITHIN AND OUTSIDE THE LIMITS OF CONSTRUCTION, AND NOT SCHEDULED FOR REMOVAL. ANY DAMAGE CAUSED TO THIS NATURAL GROWTH SHALL BE RESTORED TO THE SATISFACTION OF THE OWNER AT NO ADDITIONAL COST.

LEGEND

	FOUND IRON PIPE
GV	GAS VALVE
WV	WATER VALVE
WSB	WATER SERVICE BOX
GSB	GAS SERVICE BOX
	MANHOLE (STORM)
	MANHOLE (SANITARY)
	CATCH BASIN
	WATER HYDRANT
	MAIL BOX
	UTILITY POLE W/OVERHEAD WIRES
	LIGHT POLE W/OVERHEAD WIRES
	LIGHT POLE W/UNDER GROUND WIRES
	GUY WITH ANCHOR
	SIGN
	ELECTRIC BOX
	TELEPHONE PEDESTAL
VENT	SEWER VENT
CONC. MON.	CONCRETE MONUMENT
	PK NAIL SET (N.C.L.)
	EXISTING TREE
	EXISTING PINE TREE
	PROPOSED PINE TREE
	EXISTING HEDGE
	STONE WALL
	GUIDERAIL
	RETAINING WALL
A.I.P.	ABANDONED IN PLACE
PAVT.	PAVEMENT
HSE	HOUSE
BT	BLACKTOP
RCP	REINFORCED CONCRETE PIPE
CMP	CORRUGATED METAL PIPE
	EXISTING SIGN
ROW	RIGHT-OF-WAY
12"ST	EXISTING STORM SEWER LINE
OH WIRES	EXISTING OVERHEAD WIRES
8"SAN	EXISTING SANITARY SEWER LINE
6"W	EXISTING WATER LINE
4"GAS	EXISTING GAS LINE
TEL	EXISTING UNDERGROUND TELEPHONE
TEL RIP	EXISTING UNDERGROUND TELEPHONE RETIRED IN PLACE
UE	EXISTING UNDERGROUND ELECTRIC
CATV	EXISTING CABLE TELEVISION
	EXISTING DITCH OR CREEK
x	CHAIN LINK FENCE
o	STOCKADE FENCE
100	EXISTING CONTOUR LINE

NOTES:

1. ALL UNDERGROUND UTILITY LOCATIONS ARE APPROXIMATE AND SHOULD BE FIELD VERIFIED PRIOR TO ANY CONSTRUCTION.
2. ELEVATIONS SHOT AT THE LOCATION OF THE DECIMAL POINT.

Nussbaumer & Clarke, Inc.
ENGINEERS AND SURVEYORS
3556 Lake Shore Road, Suite 500 | Buffalo, NY 14219
(716) 827-8000 | (716) 826-7958 fax
www.nussclarke.com
Erie | Niagara | Chautauqua | Cattaraugus

GRATWICK RIVERSIDE PARK MARINA 2016 RENOVATIONS

GENERAL LOCATION MAP INDEX OF DRAWINGS & GENERAL NOTES

REVISIONS

No.	DESCRIPTION	DATE

NUSSBAUMER & CLARKE, INC.
A CORPORATION REGISTERED TO PRACTICE PROFESSIONAL ENGINEERING & LAND SURVEYING IN THE STATE OF NEW YORK

NUSSBAUMER AND CLARKE INC. INCORPORATED SEAL 1933 BUFFALO, N.Y.

UNAUTHORIZED ALTERATION OR ADDITION TO THIS ENGINEERING DRAWING IS A VIOLATION OF SECTION 7209. PROVISION 2 OF THE NEW YORK STATE EDUCATION LAW.

PROJECT NUMBER	15J1-0185
DATE	JUNE 2016
DRAWN BY	JJS
DESIGNED BY	--
CHECKED BY	MTM
APPROVED BY	MTM
SCALE:	AS NOTED
	= 1 INCH
DRAWING No.	2 OF 14

G-002

I:\2015\15J1-0185 gratwick marina\08b working drawings\Discipline\G-General\GENERAL COVER & NOTES.dwg 6/10/2016 FTALLARICO

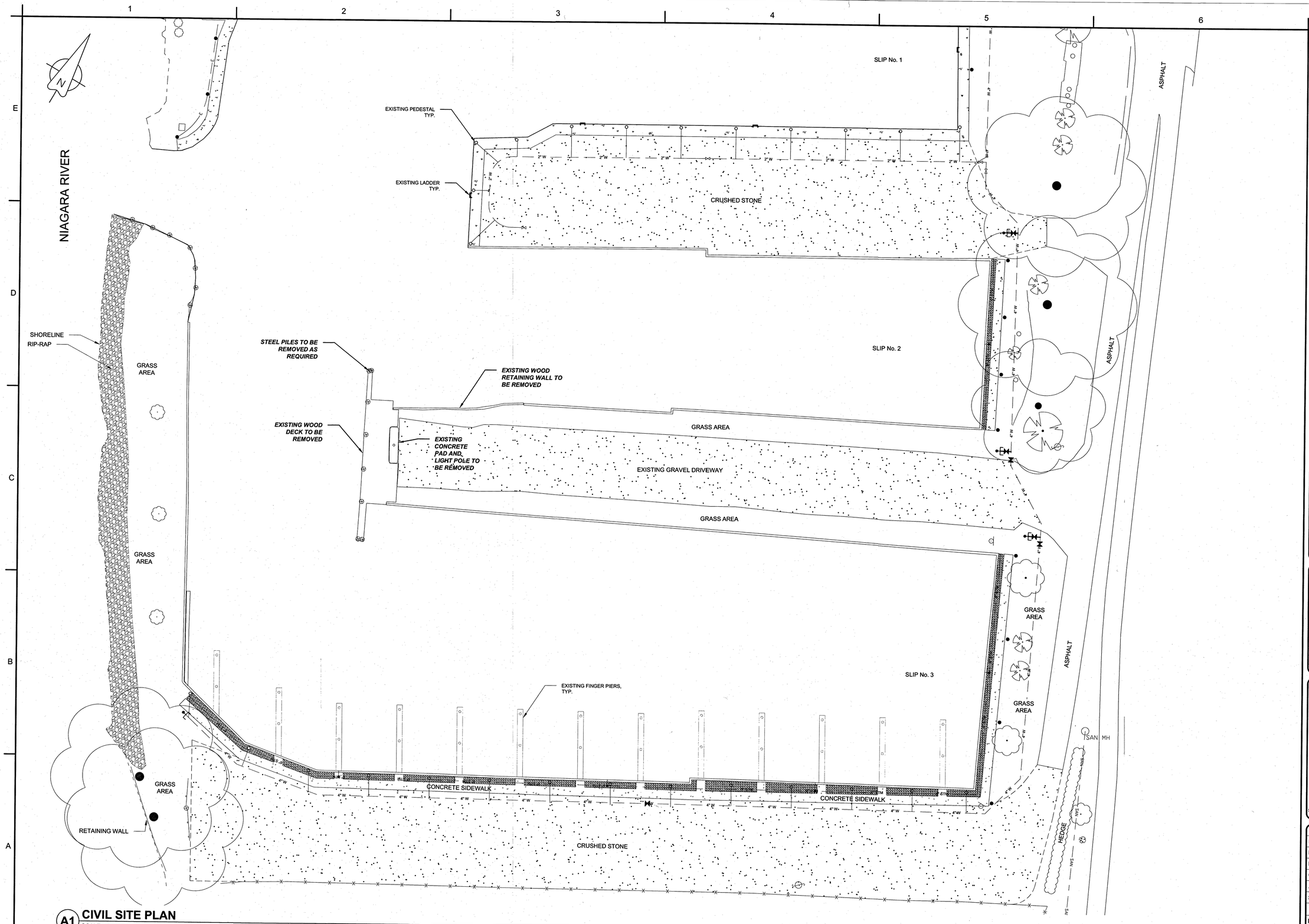

A1 CIVIL SITE PLAN
SCALE: 1" = 20'-0"

Nussbaumer & Clarke, Inc.
ENGINEERS AND SURVEYORS
3556 Lake Shore Road, Suite 500 | Buffalo, NY 14219
(716) 827-8000 | (716) 826-7958 fax
www.nussclarke.com
Erie | Niagara | Chautauqua | Cattaraugus

GRATWICK RIVERSIDE PARK MARINA 2016 RENOVATIONS

CIVIL EXISTING AND DEMOLITION SITE PLAN

REVISIONS

No.	DESCRIPTION	DATE

NUSSBAUMER & CLARKE, INC.
A CORPORATION REGISTERED TO PRACTICE PROFESSIONAL ENGINEERING & LAND SURVEYING IN THE STATE OF NEW YORK

NUSSBAUMER AND CLARKE INC. INCORPORATED SEAL 1933 BUFFALO, N.Y.

UNAUTHORIZED ALTERATION OR ADDITION TO THIS ENGINEERING DRAWING IS A VIOLATION OF SECTION 7209, PROVISION 2 OF THE NEW YORK STATE EDUCATION LAW.

PROJECT NUMBER	15J1-0185
DATE	JUNE 2016
DRAWN BY	JJS
DESIGNED BY	KWM
CHECKED BY	MTM
APPROVED BY	MTM
SCALE:	AS NOTED
	= 1 INCH
DRAWING No.	3 OF 14

C-101

I:\2015\15J1-0185 gratwick marina\08b working drawings\Discipline\C-Civil\C-101 CIVIL EXISTING AND DEMOLITION SITE PLAN.dwg 6/10/2016 DOTT

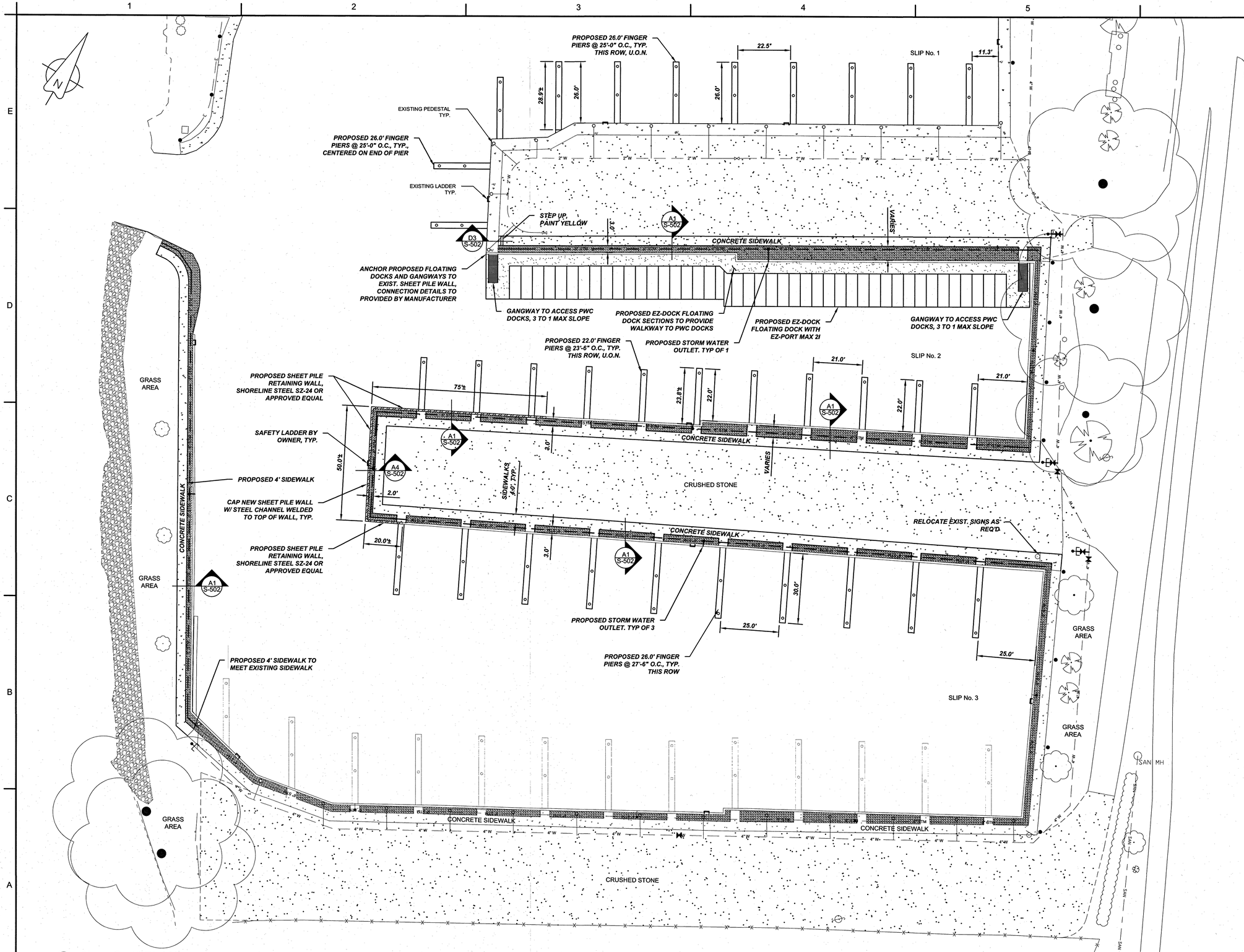

A1 CIVIL SITE PLAN
SCALE: 1" = 20'-0"

Nussbaumer & Clarke, Inc.
ENGINEERS AND SURVEYORS
3556 Lake Shore Road, Suite 500 | Buffalo, NY 14219
(716) 827-8000 | (716) 826-7958 fax
www.nussclarke.com
Erie | Niagara | Chautauqua | Cattaraugus

GRATWICK RIVERSIDE PARK MARINA 2016 RENOVATIONS

CIVIL PROPOSED SITE PLAN

REVISIONS

No.	DESCRIPTION	DATE

NUSSBAUMER & CLARKE, INC.
A CORPORATION REGISTERED TO PRACTICE PROFESSIONAL ENGINEERING & LAND SURVEYING IN THE STATE OF NEW YORK

NUSSBAUMER AND CLARKE INC. INCORPORATED 1933 BUFFALO, N.Y. SEAL

UNAUTHORIZED ALTERATION OR ADDITION TO THIS ENGINEERING DRAWING IS A VIOLATION OF SECTION 7209. PROVISION 2 OF THE NEW YORK STATE EDUCATION LAW.

PROJECT NUMBER	15J1-0185
DATE	JUNE 2016
DRAWN BY	KWM
DESIGNED BY	KWM
CHECKED BY	MTM
APPROVED BY	MTM
SCALE:	AS NOTED
	= 1 INCH
DRAWING No.	4 OF 14

C-102

I:\2015\15J1-0185 gratwick marina\0bb working drawings\Discipline\C-Civil\C-102 CIVIL PROPOSED SITE PLAN.dwg 6/13/2016 FTALLARICO

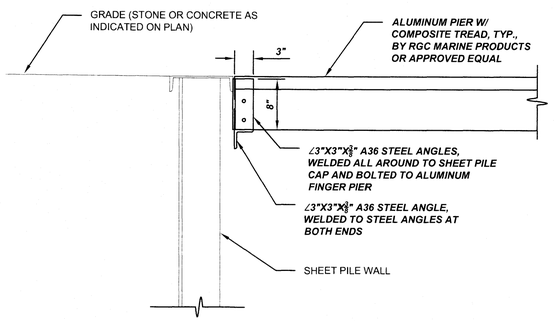

D1 TYPICAL CONNECTION AT WALL, PIER PERP. TO WALL - SECTION VIEW

SCALE: 1" = 1'-0"

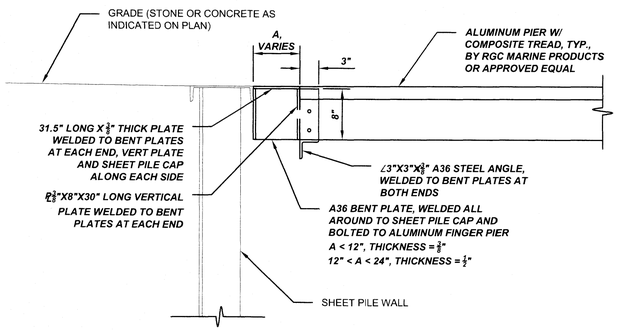

C1 TYPICAL CONNECTION AT WALL, PIER AT ANGLE TO WALL - SECTION VIEW

SCALE: 1" = 1'-0"

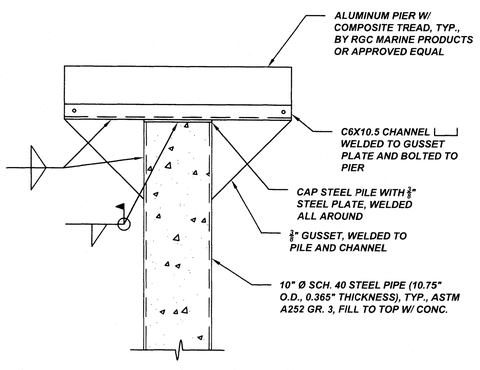

A1 TYPICAL CONNECTION AT PILE - SECTION VIEW

SCALE: 1" = 1'-0"

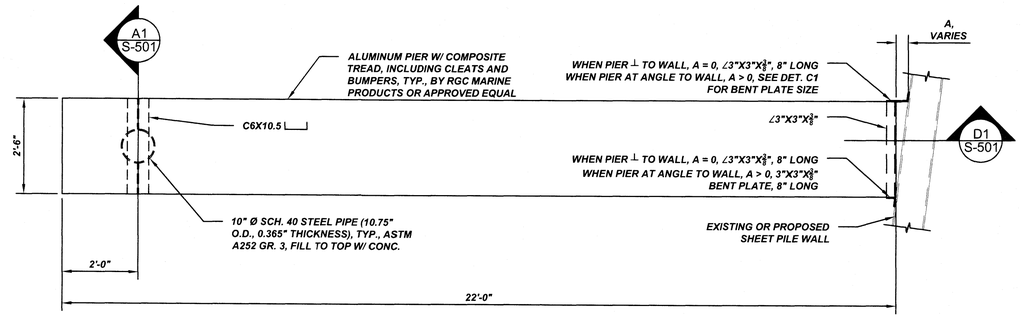

D3 TYPICAL 22' FINGER PIER - PLAN VIEW

SCALE: 1/2" = 1'-0"

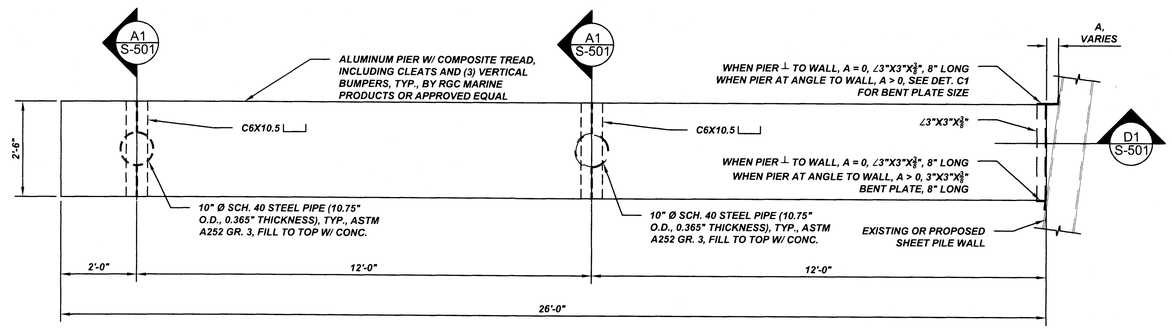

C3 TYPICAL 26' FINGER PIER - PLAN VIEW

SCALE: 1/2" = 1'-0"

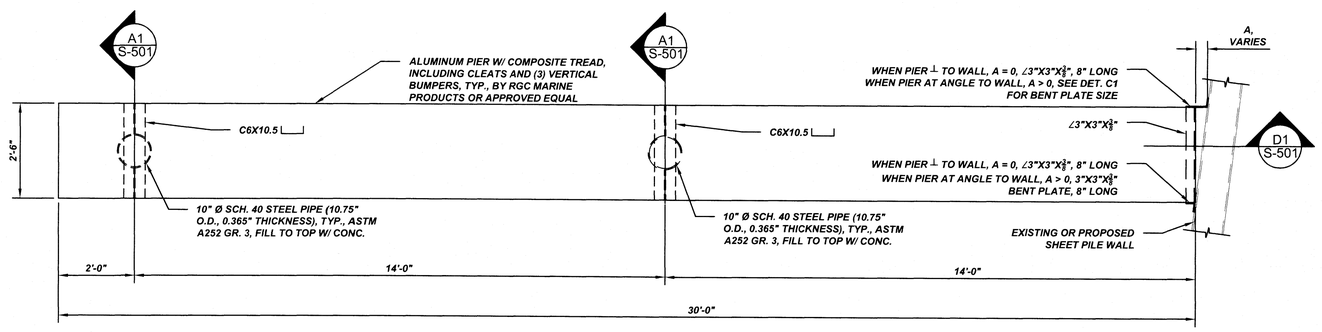

B3 TYPICAL 30' FINGER PIER - PLAN VIEW

SCALE: 1/2" = 1'-0"

NOTES

1. DESIGN OF ALUMINUM PIER, INCLUDING CONNECTIONS TO STEEL PILES AND WALL, SHALL BE BY PIER MANUFACTURER. CONTRACTOR TO SUBMIT FOR APPROVAL.
2. ALUMINUM PIER TO INCLUDE CLEATS AND BUMPERS BY THE PIER MANUFACTURER.
3. ALUMINUM AND STEEL TO HAVE BITUMINOUS PAINT ON CONTACTING SURFACES OR OTHER SEPARATION TO PREVENT DISSIMILAR METAL REACTION.
4. WELDING SHALL BE PERFORMED IN ACCORDANCE WITH THE AWS STRUCTURAL WELDING CODE. WELDED CONNECTIONS SHALL BE MADE WITH E70XX ELECTRODES. ROOT PASS AND TACK WELDS SHALL BE MADE WITH E6010 ELECTRODES. FILLET WELDS SHALL BE 1/4" UNLESS OTHERWISE NOTED.

GENERAL NOTES

1. THESE GENERAL NOTES ARE NOT INTENDED TO REPLACE SPECIFICATIONS. SEE SPECIFICATIONS FOR REQUIREMENTS IN ADDITION TO GENERAL NOTES.
2. THE STRUCTURAL DRAWINGS AND SPECIFICATIONS REPRESENT THE FINISHED STRUCTURE, AND, EXCEPT WHERE SPECIFICALLY SHOWN, DO NOT INDICATE THE METHOD OR MEANS OF CONSTRUCTION. THE CONTRACTOR SHALL SUPERVISE AND DIRECT THE WORK AND SHALL BE SOLELY RESPONSIBLE FOR ALL CONSTRUCTION MEANS, METHODS, PROCEDURES, TECHNIQUES, AND SEQUENCE. ALL APPLICABLE SAFETY REGULATIONS TO BE FOLLOWED STRICTLY.
3. THE GENERAL CONTRACTOR SHALL CHECK AND VERIFY ALL DIMENSIONS AND GRADE CONDITIONS (BOTH NEW AND EXISTING), REPORTING ANY DISCREPANCIES TO THE ENGINEER PRIOR TO ORDERING MATERIALS OR PROCEEDING WITH ANY PHASE OF THE WORK.
4. DO NOT SCALE DIMENSIONS FROM DRAWINGS. THE CONTRACTOR SHALL REQUEST, FROM THE ENGINEER, NECESSARY DIMENSIONS NOT SHOWN ON THE DRAWINGS.
5. IF ANY BIDDER IS IN DOUBT AS TO THE INTENT OF THE PLANS OR SPECIFICATIONS, THEY SHALL REQUEST AN INTERPRETATION FROM THE ENGINEER IN WRITING AT LEAST TEN (10) DAYS PRIOR TO THE SCHEDULED BID DATE.

REPRODUCTION NOTE

1. THE USE OF REPRODUCTIONS OF THESE CONTRACT DRAWINGS BY ANY CONTRACTOR, SUBCONTRACTOR, ERECTOR, FABRICATOR, OR MATERIAL SUPPLIER IN LIEU OF PREPARATION OF SHOP DRAWINGS SIGNIFIES HIS ACCEPTANCE OF ALL INFORMATION SHOWN HEREIN AS CORRECT, AND OBLIGATES HIMSELF TO ANY JOB EXPENSE, REAL OR IMPLIED, ARISING DUE TO ANY ERRORS THAT MAY OCCUR HEREON.

Nussbaumer & Clarke, Inc.
ENGINEERS AND SURVEYORS
3556 Lake Shore Road, Suite 500 | Buffalo, NY 14219
(716) 827-8000 | (716) 826-7958 fax
www.nussclarke.com
Erie | Niagara | Chautauqua | Cattaraugus

GRATWICK RIVERSIDE PARK MARINA 2016 RENOVATIONS

STRUCTURAL DETAILS

REVISIONS

No.	DESCRIPTION	DATE

NUSSBAUMER & CLARKE, INC.
A CORPORATION REGISTERED TO PRACTICE PROFESSIONAL ENGINEERING & LAND SURVEYING IN THE STATE OF NEW YORK

NUSSBAUMER AND CLARKE INCORPORATED SEAL 1933 BUFFALO, N.Y.

UNAUTHORIZED ALTERATION OR ADDITION TO THIS ENGINEERING DRAWING IS A VIOLATION OF SECTION 7209. PROVISION 2 OF THE NEW YORK STATE EDUCATION LAW.

PROJECT NUMBER	15J1-0185
DATE	JUNE 2016
DRAWN BY	KWM
DESIGNED BY	KWM
CHECKED BY	MTM
APPROVED BY	MTM
SCALE:	AS NOTED
	= 1 INCH
DRAWING No.	5 OF 14

S-501

I:\2015\15J1-0185 gratwick marina\08b working drawings\Discipline\S-Structural\S-501 STRUCTURAL DETAILS.dwg 6/10/2016 DOTT

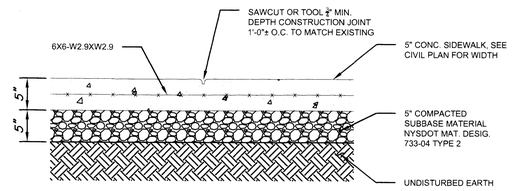

E1 TYPICAL SIDEWALK SECTION
SCALE: 1" = 1'-0"

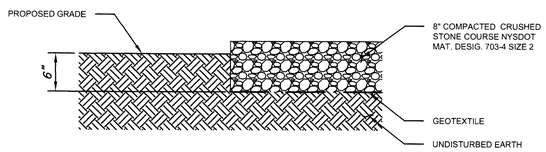

D1 TYPICAL DRIVEWAY SECTION
SCALE: 1" = 1'-0"

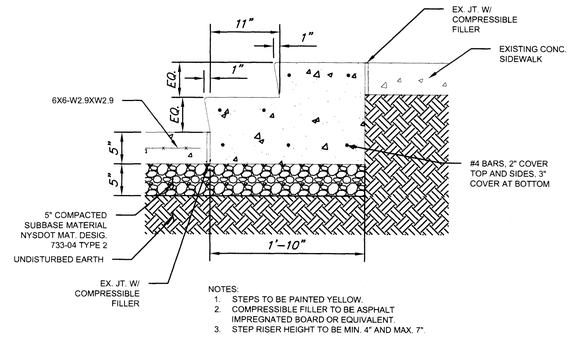

NOTES:
1. STEPS TO BE PAINTED YELLOW.
2. COMPRESSIBLE FILLER TO BE ASPHALT IMPREGNATED BOARD OR EQUIVALENT.
3. STEP RISER HEIGHT TO BE MIN. 4" AND MAX. 7".

D3 STEP SECTION
SCALE: 1" = 1'-0"

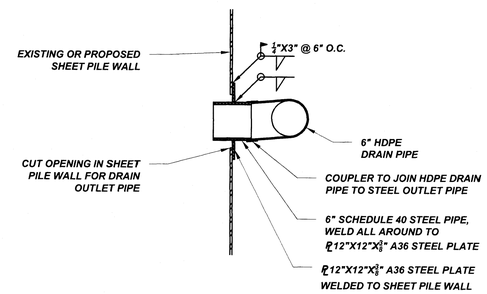

D5 TYPICAL DRAIN PIPE OUTLET
SCALE: 1" = 1'-0"

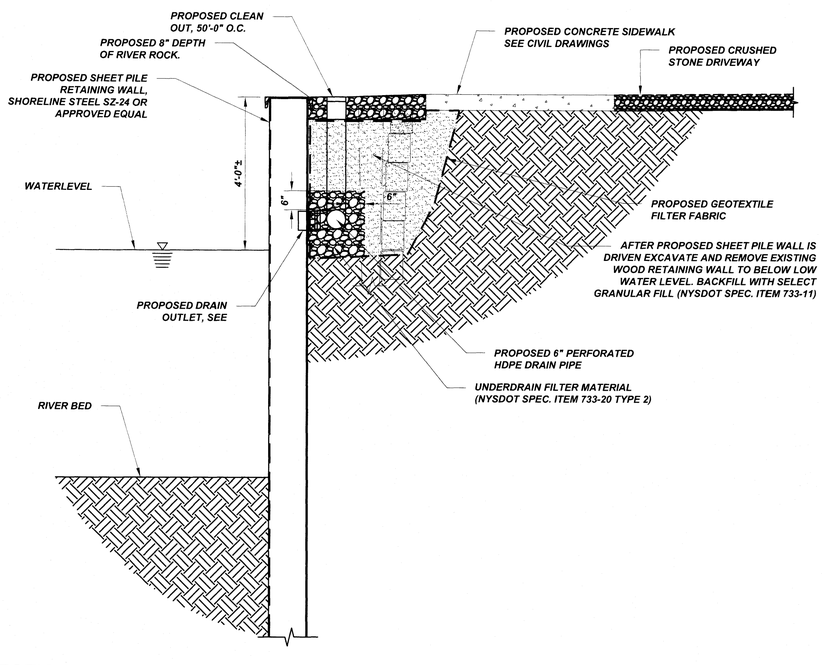

A1 SECTION AT SHEET PILE RETAINING WALL
SCALE: 1/2" = 1'-0"

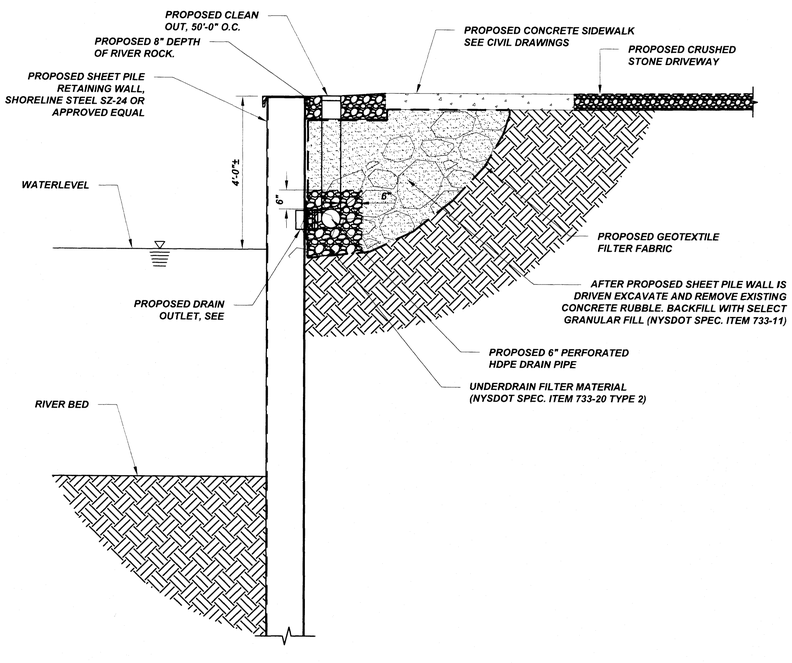

A4 SECTION AT SHEET PILE RETAINING WALL
SCALE: 1/2" = 1'-0"

Nussbaumer & Clarke, Inc.
ENGINEERS AND SURVEYORS
3556 Lake Shore Road, Suite 500 | Buffalo, NY 14219
(716) 827-8000 | (716) 826-7958 fax
www.nussclarke.com
Erie | Niagara | Chautauqua | Cattaraugus

GRATWICK RIVERSIDE PARK MARINA 2016 RENOVATIONS

STRUCTURAL DETAILS

REVISIONS

No.	DESCRIPTION	DATE

NUSSBAUMER & CLARKE, INC.
A CORPORATION REGISTERED TO PRACTICE PROFESSIONAL ENGINEERING & LAND SURVEYING IN THE STATE OF NEW YORK

NUSSBAUMER AND CLARKE INC. INCORPORATED SEAL 1933 BUFFALO, N.Y.

UNAUTHORIZED ALTERATION OR ADDITION TO THIS ENGINEERING DRAWING IS A VIOLATION OF SECTION 7209, PROVISION 2 OF THE NEW YORK STATE EDUCATION LAW.

PROJECT NUMBER	15J1-0185
DATE	JUNE 2016
DRAWN BY	KWM
DESIGNED BY	KWM
CHECKED BY	MTM
APPROVED BY	MTM
SCALE:	AS NOTED
	= 1 INCH
DRAWING No.	6 OF 14

S-502

I:\2015\15J1-0185 gratwick marina\dbx working drawings\Discipline\S-502 STRUCTURAL DETAILS.dwg 6/10/2016 DDTT

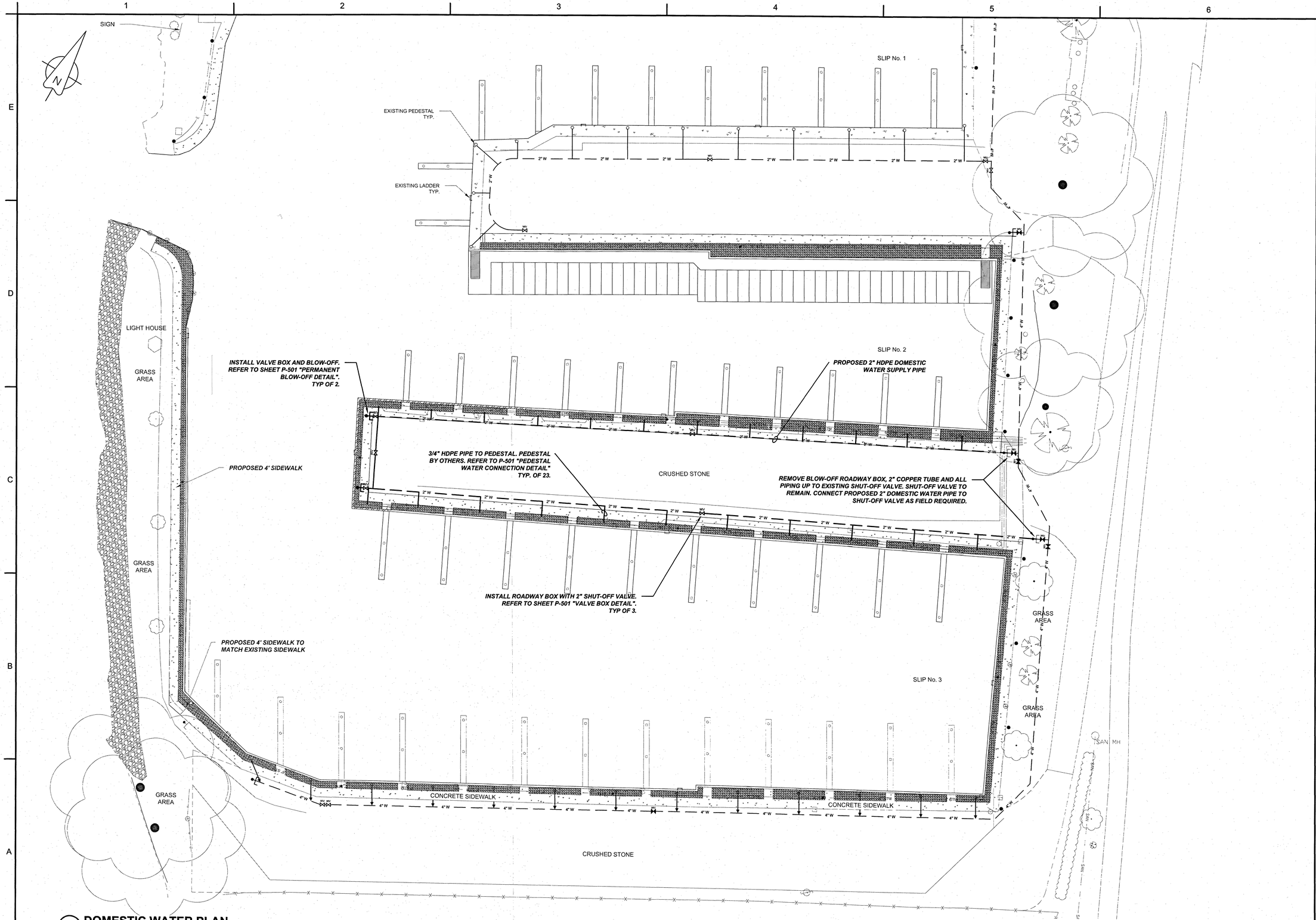

A1 DOMESTIC WATER PLAN

SCALE: 1" = 20'-0"

Nussbaumer & Clarke, Inc.
ENGINEERS AND SURVEYORS
3556 Lake Shore Road, Suite 500 | Buffalo, NY 14219
(716) 827-8000 | (716) 826-7958 fax
www.nussclarke.com
Erie | Niagara | Chautauqua | Cattaraugus

GRATWICK RIVERSIDE PARK MARINA 2016 RENOVATIONS

PLUMBING PROPOSED SITE PLAN

REVISIONS

No.	DESCRIPTION	DATE

NUSSBAUMER & CLARKE, INC.
A CORPORATION REGISTERED TO PRACTICE PROFESSIONAL ENGINEERING & LAND SURVEYING IN THE STATE OF NEW YORK

NUSSBAUMER AND CLARKE, INC. INCORPORATED 1933 BUFFALO, N.Y. SEAL

UNAUTHORIZED ALTERATION OR ADDITION TO THIS ENGINEERING DRAWING IS A VIOLATION OF SECTION 7209. PROVISION 2 OF THE NEW YORK STATE EDUCATION LAW.

PROJECT NUMBER	15J1-0185
DATE	JUNE 2016
DRAWN BY	DMO
DESIGNED BY	DMO
CHECKED BY	MTM
APPROVED BY	MTM
SCALE:	AS NOTED
	= 1 INCH
DRAWING No.	7 OF 14

P-101

I:\2015\15J1-0185 gratwick marina\0bb working drawings\Discipline\P-Plumbing\PLUMBING PROPOSED SITE PLAN.dwg 6/10/2016 DOTT

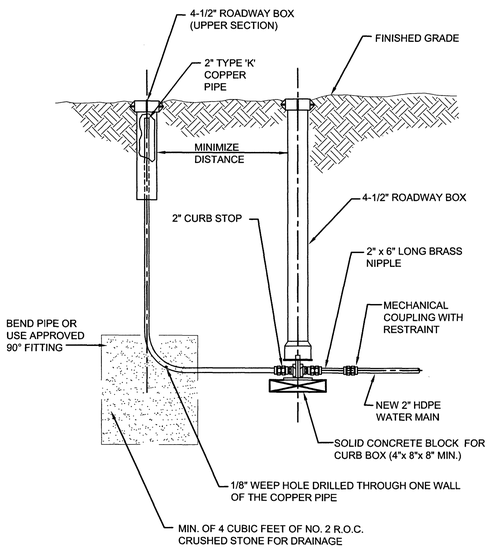

C1 PERMANENT BLOW-OFF DETAIL
SCALE: NOT TO SCALE

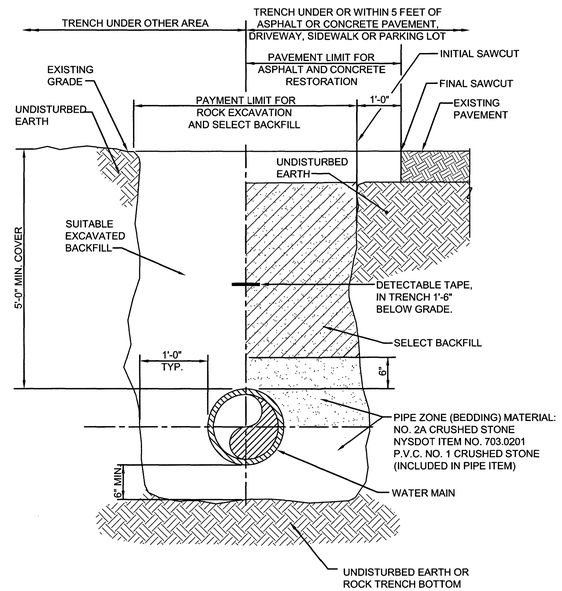

C2 TRENCH DETAIL
SCALE: NOT TO SCALE

SYMBOL SCHEDULE	
SYMBOL	DESCRIPTION
2"W	PROPOSED WATER SUPPLY PIPE TO BE INSTALLED. NUMBER IS SIZE OF PIPE
2"W	EXISTING WATER SUPPLY PIPE TO BE INSTALLED. NUMBER IS SIZE OF PIPE
WV	PROPOSED SHUT-OFF VALVE WITH ROADWAY BOX TO BE INSTALLED
WV	EXISTING SHUT-OFF VALVE WITH ROADWAY BOX TO REMAIN
	PROPOSED PERMANENT BLOW-OFF WITH ROADWAY BOX TO BE INSTALLED
	EXISTING PERMANENT BLOW-OFF WITH ROADWAY BOX TO REMAIN
	EXISTING PERMANENT BLOW-OFF WITH ROADWAY BOX TO BE REMOVED
	PROPOSED POWER AND WATER PEDESTAL BY OTHERS

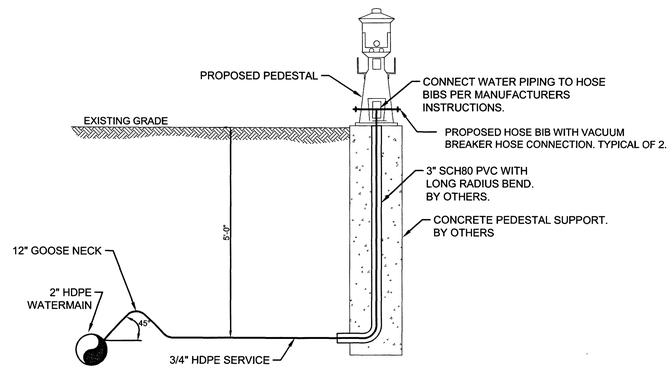

NOTE:
1. CONNECTIONS TO 2" HDPE WATERMAIN SHALL HAVE A MINIMUM 2'-0" SEPARATION.

C4 PEDESTAL WATER CONNECTION DETAIL
SCALE: NOT TO SCALE

PLUMBING NOTES:

1. THE PLUMBING CONTRACTOR SHALL PROVIDE ALL LABOR AND MATERIAL NECESSARY FOR A COMPLETE PLUMBING SYSTEM AS SHOWN. CLEANED, TESTED, FULLY OPERATIONAL AND READY TO USE.
2. ALL MATERIALS AND INSTALLATION SHALL BE IN ACCORDANCE WITH THE APPLICABLE PLUMBING CODE OF NYS, NFPA, ADA, OSHA, AND ALL LOCAL CODES.
3. THE CONTRACTOR SHALL BE RESPONSIBLE FOR OBTAINING ALL NECESSARY PERMITS AND INSPECTIONS, INCLUDING ASSOCIATED COSTS.
4. ALL MATERIAL SHALL BE NEW AND UNUSED UNLESS OTHERWISE STATED. ALL PROPOSED EQUIPMENT SHALL BE SUBMITTED FOR APPROVAL TO THE ENGINEER BEFORE ANY INSTALLATION IS STARTED.
5. THESE DRAWINGS ARE DIAGRAMMATIC IN NATURE AND INDICATE THE SIZE AND GENERAL ARRANGEMENT OF PIPING, EQUIPMENT, ETC. EXACT LOCATIONS AND ROUTINGS SHALL BE DETERMINED IN THE FIELD BEFORE AND AS THE WORK PROGRESSES. CAREFULLY COORDINATE THE WORK OF THIS TRADE WITH ALL OTHER TRADES.
6. ALL PIPING SHALL BE CLEAN AND FREE OF LEAKS. INSTALL ALL PIPING AND PIPE FITTINGS IN A MANNER NOT TO INTERFERE WITH ACCESS TO EQUIPMENT AND ANY DEVICE WHICH REQUIRES ACCESS.
7. ALL PIPING SHALL BE SUPPORTED AS REQUIRED.
8. ALL BURIED DOMESTIC WATER PIPING SHALL BE AS LISTED ON THE PLANS, TYPE "K" COPPER AND MEET ASTM B 75 AND ASTM B 88 STANDARDS OR HDPE AND MEET ASTM F 1986 STANDARDS. ALL COPPER FITTINGS SHALL BE FLARED,THREADED ADAPTORS AND HDPE SHALL BE MECHANICAL COUPLINGS WITH RESTRAINT.

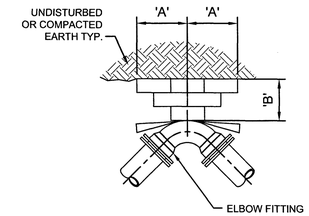

PLAN

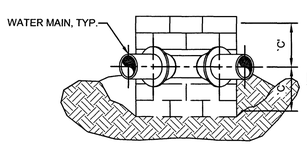

ELEVATION

NOTE:
1. FITTING TO BE POLYETHYLENE WRAPPED PRIOR TO CONCRETE PLACEMENT.

DIMENSION SCHEDULE													
PIPE SIZE	11.25° ELBOW			22.5° ELBOW			45° ELBOW			90° ELBOW			
	'A'	'B'	'C'	'A'	'B'	'C'	'A'	'B'	'C'	'A'	'B'	'C'
2"	1.0'	1.0'	0.5'	1.0'	1.0'	0.5'	1'-6"	1'-6"	0.75'	1'-6"	1'-6"	0.75'
4"	1.0'	1.0'	0.5'	1.0'	1.0'	0.5'	1'-6"	1'-6"	0.75'	1'-6"	1'-6"	0.75'
–	–	–	–	–	–	–	–	–	–	–	–	–

A1 THRUST BLOCK FOR ELBOW FITTING
SCALE: NOT TO SCALE

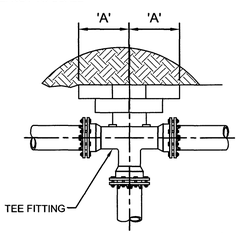

PLAN

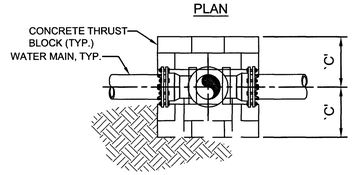

ELEVATION

NOTES:
1. THRUST BLOCK REQUIRED FOR TEES, HYDRANT LATERAL TEES AND TAPPING SLEEVE INSTALLATIONS.
2. FITTING TO BE POLYETHYLENE WRAPPED PRIOR TO BEDDING AND CONCRETE BLOCK PLACEMENT.

BRANCH TEE SIZE	DIMENSION SCHEDULE		
	'A'	'B'	'C'
2"	2'-0"	2'-0"	1'-6"
4"	2'-0"	2'-0"	1'-6"
-	-	-	-

A2 THRUST BLOCK FOR TEE FITTING
SCALE: NOT TO SCALE

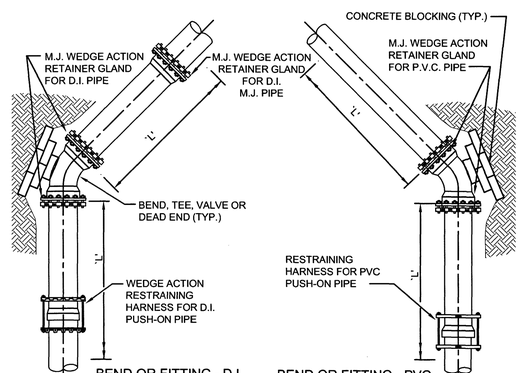

BEND OR FITTING - D.I. THROUGH 12-INCH

BEND OR FITTING - PVC THROUGH 10-INCH

RESTRAINED JOINT SCHEDULE					
PIPE SIZE	PIPE TYPE	11.25° ELBOW	22.5° ELBOW	45° ELBOW	TEE BRANCH, 90° BEND, VALVE OR DEAD END
		'L'	'L'	'L'	'L'
2"	HDPE	12'	23'	45'	94'
4"	PVC	12'	23'	45'	94'
-	-	-	-	-	-

NOTES:
1. DIMENSION 'L' REPRESENTS THE LENGTH OF RESTRAINED PIPE REQUIRED IN FEET EACH SIDE OF THE PIPE FITTING.

A3 RESTRAINED JOINT SCHEDULE
SCALE: NOT TO SCALE

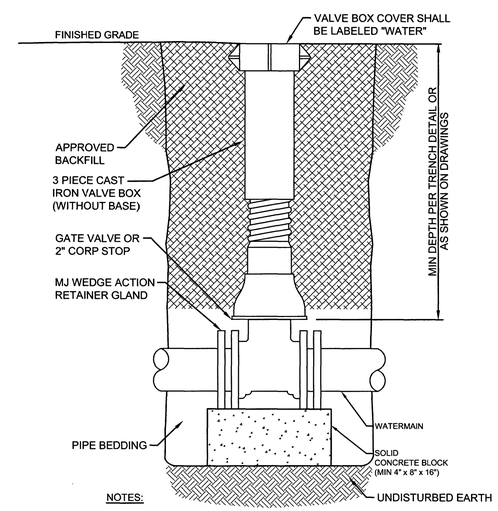

NOTES:
1. VALVE SHALL NOT SUPPORT VALVE BOX
2. ALL JOINTS SHALL BE PROPERLY RESTRAINED
3. BACKFILL TO TOP OF PIPE WITH CRUSHED STONE

A5 VALVE BOX DETAIL
SCALE: NOT TO SCALE

Nussbaumer & Clarke, Inc.
ENGINEERS AND SURVEYORS
3556 Lake Shore Road, Suite 500 | Buffalo, NY 14219
(716) 827-8000 | (716) 826-7958 fax
www.nussclarke.com
Erie | Niagara | Chautauqua | Cattaraugus

GRATWICK RIVERSIDE PARK MARINA 2016 RENOVATIONS

PLUMBING DETAILS, SCHEDULE, AND NOTES

REVISIONS

No.	DESCRIPTION	DATE

NUSSBAUMER & CLARKE, INC.
A CORPORATION REGISTERED TO PRACTICE PROFESSIONAL ENGINEERING & LAND SURVEYING IN THE STATE OF NEW YORK

NUSSBAUMER AND CLARKE, INC. INCORPORATED SEAL 1933 BUFFALO, N.Y.

UNAUTHORIZED ALTERATION OR ADDITION TO THIS ENGINEERING DRAWING IS A VIOLATION OF SECTION 7209. PROVISION 2 OF THE NEW YORK STATE EDUCATION LAW.

PROJECT NUMBER	15J1-0185
DATE	JUNE 2016
DRAWN BY	DMO
DESIGNED BY	DMO
CHECKED BY	MTM
APPROVED BY	MTM
SCALE:	AS NOTED
	= 1 INCH
DRAWING No.	8 OF 14

P-501

I:\2015\15J1-0185 gratwick marina\08b working drawings\Discipline\P-Plumbing\P-501 PLUMBING DETAILS.dwg 6/10/2016 DOTT

ELECTRICAL SPECIFICATIONS:

1. THE CONTRACTOR SHALL SUPPLY ALL LABOR AND MATERIAL NECESSARY FOR A COMPLETE ELECTRICAL SYSTEM AS SHOWN, TESTED AND READY TO USE.
2. BEFORE SUBMITTING A BID, THE CONTRACTOR SHALL VISIT THE PROJECT LOCATION TO DETERMINE ALL EXISTING CONDITIONS THAT WILL AFFECT THE INSTALLATION OF THE PROPOSED MATERIAL AND EQUIPMENT. THE ENGINEER SHALL BE NOTIFIED OF ANY CONFLICTS FOUND.
3. ALL MATERIALS AND INSTALLATION SHALL BE IN ACCORDANCE WITH THE NATIONAL ELECTRICAL CODE, NFPA, ADA, OSHA, AND ALL LOCAL REQUIREMENTS.
4. THE CONTRACTOR SHALL BE RESPONSIBLE FOR OBTAINING ALL NECESSARY PERMITS AND INSPECTIONS, INCLUDING ASSOCIATED COSTS.
5. ALL MATERIAL AND FIXTURES SHALL BE NEW AND UNUSED, UNLESS OTHERWISE NOTED. ALL MATERIAL AND FIXTURES SHALL BE U.L. APPROVED.
6. ALL ELECTRICAL LOADS SHALL BE BALANCED BETWEEN PHASES.
7. ALL PROPOSED DEVICES AND COVERS SHALL MATCH EXISTING.
8. THE CONTRACTOR SHALL PROVIDE ALL CIRCUIT BREAKERS NECESSARY FOR A COMPLETE SYSTEM, INCLUDING SINGLE PHASE AND THREE PHASE.
9. THE CONTRACTOR SHALL PROVIDE AS-BUILT DRAWINGS UPON COMPLETION OF THE PROJECT TO THE ENGINEER.
10. CONTRACTOR TO COORDINATE DEVICE LOCATIONS WITH EQUIPMENT BEING SUPPLIED.
11. ALL DEVICES AND FIXTURES SHALL BE CLEANED AND TESTED PRIOR TO ACCEPTANCE.
12. CONTRACTOR SHALL MATCH ALL DEVICES AND FIXTURES BEING INSTALLED TO THE EXISTING EQUIPMENT.
13. THE CONTRACTOR SHALL VERIFY ALL EQUIPMENT REQUIREMENTS WITH ACTUAL EQUIPMENT BEING SUPPLIED PRIOR TO INSTALLATION.
14. COORDINATE WORK WITH LOCAL POWER COMPANY. CONTRACTOR RESPONSIBLE FOR ALL ASSOCIATED COSTS AND FEES.

LIGHTING FIXTURE SCHEDULE

TYPE	DESCRIPTION	MANUFACTURER	LAMP	MOUNTING	NOTES:
LP-1	PROPOSED LED POLE LIGHT FIXTURE, 120V, 1Ø PROPOSED 18', 4" Ø, STRAIGHT ROUND SHAFT, STEEL POLE, DARK BRONZE	LITHONIA LIGHTING MRP LED 42C 50K 700 SR5 MVOLT PER PNMTDD3 BLL127F1.5JU DDBXD OR APPROVED EQUAL LITHONIA RSS-20-AB PT DDB	LED 100 WATTS 5,000K	POLE MOUNTED 4- 3/4" Ø x 18" L-TYPE ANCHOR BOLTS ON 8.5" Ø BOLT CIRCLE	REFER TO DETAIL A3 E-501
LP-2	PROPOSED LED POLE LIGHT FIXTURE, 120V, 1Ø PROPOSED 18', 4" Ø, STRAIGHT ROUND SHAFT, STEEL POLE, DARK BRONZE	LITHONIA LIGHTING MRP LED 42C 50K 700 SR4 MVOLT PER PNMTDD3 BLL127F1.5JU DDBXD OR APPROVED EQUAL LITHONIA RSS-20-AB PT DDB	LED 100 WATTS 5,000K	POLE MOUNTED 4- 3/4" Ø x 18" L-TYPE ANCHOR BOLTS ON 8.5" Ø BOLT CIRCLE	REFER TO DETAIL A3 E-501
SB-1	PROPOSED 42" BOLLARD WITH LIGHT 120V SINGLE PHASE	McGRAW EDISON BRL 42 42 CF UNV BK L	CFL 42 WATTS 5,000K	BOLLARD MOUNTED	REFER TO DETAIL D1 E-501
	EATON LIGHTHOUSE POWER PEDESTAL	EATON LDU2020210S REFER TO SHEET E-501 FOR ADDITIONAL INFORMATION	13W CFL	PEDESTAL MOUNTED	REFER TO DETAIL C2 E-501

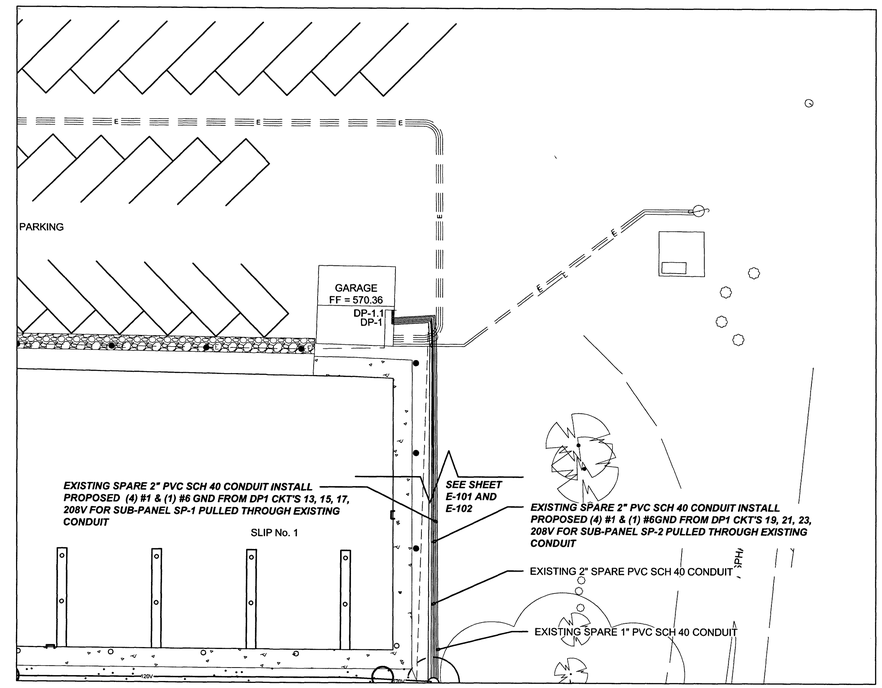

B4 PROPOSED AND EXISTING ELECTRICAL SITE WORK
SCALE: 1"=20'

Nussbaumer & Clarke, Inc.
ENGINEERS AND SURVEYORS
3556 Lake Shore Road, Suite 500 | Buffalo, NY 14219
(716) 827-8000 | (716) 826-7958 fax
www.nussclarke.com
Erie | Niagara | Chautauqua | Cattaraugus

GRATWICK RIVERSIDE PARK MARINA 2016 RENOVATIONS

ELECTRICAL SPECIFICATIONS, SCHEDULES, AND SITE PLAN

REVISIONS

No.	DESCRIPTION	DATE

NUSSBAUMER & CLARKE, INC.
A CORPORATION REGISTERED TO PRACTICE PROFESSIONAL ENGINEERING & LAND SURVEYING IN THE STATE OF NEW YORK

NUSSBAUMER AND CLARKE INC. INCORPORATED 1933 BUFFALO, N.Y.

UNAUTHORIZED ALTERATION OR ADDITION TO THIS ENGINEERING DRAWING IS A VIOLATION OF SECTION 7209. PROVISION 2 OF THE NEW YORK STATE EDUCATION LAW.

PROJECT NUMBER	15J1-0185
DATE	JUNE 2016
DRAWN BY	FJT
DESIGNED BY	FJT
CHECKED BY	JEZ
APPROVED BY	MTM
SCALE:	AS NOTED
	= 1 INCH
DRAWING No.	9 OF 14

E-101

I:\2015\15J1-0185 gratwick marina\08b working drawings\Discipline\E-Electrical\E-101, E-102 ELECTRICAL SITE PLAN.dwg 6/10/2016 DOTT

SIGN

SEE SHEET E-101

SLIP No. 1

EXISTING 3 - SPARE 2" PVC SCH 40 CONDUIT WITH PULL STRING

EXISTING 1 - SPARE 1" PVC SCH 40 CONDUITS WITH PULL STRING

EXISTING PEDESTAL LIGHTING CONDUIT FROM DP1 CKT 15, 120V FOR PEDESTALS (13 WATT FLUORESCENT LIGHTS) EXISTING WIRE AND FROM DP1 CKT 17. FOR BOLLARD LIGHTING FIXTURES VIA PHOTO SENSOR EXISTING WIRE FROM DP1 CKT 19.

EXISTING PEDESTAL TYP.

EXISTING PULLBOX (PB-1)

EXISTING CONDUIT AND WIRES FROM DP1 FOR PEDESTALS #1 THROUGH #7 FROM DP1 FOR PEDESTALS #8 THROUGH #14 TO REMAIN

EXISTING 3 - SPARE 2" PVC SCH 40 CONDUIT WITH PULL STRING

EXISTING LADDER TYP.

EXISTING LIGHT TO REMAIN

EXISTING PEDESTAL LIGHTING CONDUIT FROM DP1 CKT 15, 120V FOR PEDESTALS (13 WATT FLUORESCENT LIGHTS) EXISTING WIRE AND FROM DP1 CKT 17. FOR BOLLARD LIGHTING FIXTURES VIA PHOTO SENSOR EXISTING WIRE FROM DP1 CKT 19.

EXISTING 1 - SPARE 1" PVC SCH 40 CONDUITS WITH PULL STRING

REMOVE ALL CONDUITS AND EQUIPMENT TO 2' BELOW GRADE. ABANDON CONDUIT BELOW 2' IN PLACE.

SLIP No. 2

REMOVE ALL CONDUITS AND ELECTRICAL EQUIPMENT ABOVE GRADE TO 2' BELOW GRADE. ABANDON CONDUIT BELOW 2' IN PLACE.

EXISTING LIGHT TO BE REMOVED

EXISTING UTILITY POLE TO REMAIN

EXISTING PULLBOX (PB-2)

EXISTING 1 - SPARE 2" PVC SCH 40 CONDUITS WITH PULL STRING

EXISTING PEDESTAL LIGHTING CONDUIT FROM DP1 CKT 15, 120V FOR PEDESTALS (13 WATT FLUORESCENT LIGHTS) EXISTING WIRE AND FROM DP1 CKT 17. FOR BOLLARD LIGHTING FIXTURES VIA PHOTO SENSOR EXISTING WIRE FROM DP1 CKT 19.

EXISTING 1 - SPARE 1" PVC SCH 40 CONDUITS WITH PULL STRING

SLIP No. 3

EXISTING CONDUIT AND WIRE FROM DP1 PEDESTALS #1 THROUGH #6. EXISTING CONDUIT AND WIRE FROM DP1 PEDESTALS #7 THROUGH #13 TO REMAIN.

PEDESTAL #14 | PEDESTAL #13 | PEDESTAL #12 | PEDESTAL #11 | PEDESTAL #10 | PEDESTAL #9 | PEDESTAL #8 | PEDESTAL #7 | PEDESTAL #6 | PEDESTAL #5 | PEDESTAL #4 | PEDESTAL #3 | PEDESTAL #2 | PEDESTAL #1

CONCRETE SIDEWALK

CONCRETE SIDEWALK

EXISTING PULLBOX (PB-2)

EXISTING CONDUIT AND WIRES FROM DP1 CKT 15. 120V FOR PEDESTALS #1 THROUGH #13 (13 WATT FLUORESCENT LIGHTS) VIA PHOTO SENSOR.

EXISTING CONDUIT AND WIRES FROM DP1 PEDESTAL #7.

EXISTING LIGHTHOUSE POWER PEDESTAL (TYP OF 14)

CRUSHED STONE

EXISTING CONDUIT AND WIRES FROM DP1 FOR PEDESTAL #1.

EXISTING CONDUIT AND WIRES FOR PEDESTALS #8 THROUGH 13.

EXISTING CONDUIT AND WIRES PEDESTALS #2 THROUGH #6.

EXISTING UTILITY POLE, OVER HEAD WIRE, METER, AND 200A PANEL TO BE REMOVED

A1 ELECTRICAL EXISTING AND DEMOLITION

SCALE: 1" = 20' 0"

Nussbaumer & Clarke, Inc.
ENGINEERS AND SURVEYORS
3556 Lake Shore Road, Suite 500 | Buffalo, NY 14219
(716) 827-6000 | (716) 826-7958 fax
www.nussclarke.com
Erie | Niagara | Chautauqua | Cattaraugus

GRATWICK RIVERSIDE PARK MARINA 2016 RENOVATIONS

ELECTRICAL EXISTING SITE PLAN

REVISIONS

No.	DESCRIPTION	DATE

NUSSBAUMER & CLARKE, INC.
A CORPORATION REGISTERED TO PRACTICE PROFESSIONAL ENGINEERING & LAND SURVEYING IN THE STATE OF NEW YORK

NUSSBAUMER AND CLARKE, INC. INCORPORATED 1936 BUFFALO, N.Y.

UNAUTHORIZED ALTERATION OR ADDITION TO THIS ENGINEERING DRAWING IS A VIOLATION OF SECTION 7209. PROVISION 2 OF THE NEW YORK STATE EDUCATION LAW.

PROJECT NUMBER	15J1-0185
DATE	JUNE 2016
DRAWN BY	FJT
DESIGNED BY	FJT
CHECKED BY	JEZ
APPROVED BY	MTM
SCALE:	AS NOTED
	= 1 INCH
DRAWING No.	10 OF 14

E-102

b:\2015\15j1-0185 gratwick marina\08b working drawings\Discipline\E-Electrical\E-101, E-102 ELECTRICAL SITE PLAN.dwg 6/10/2016 DOTT

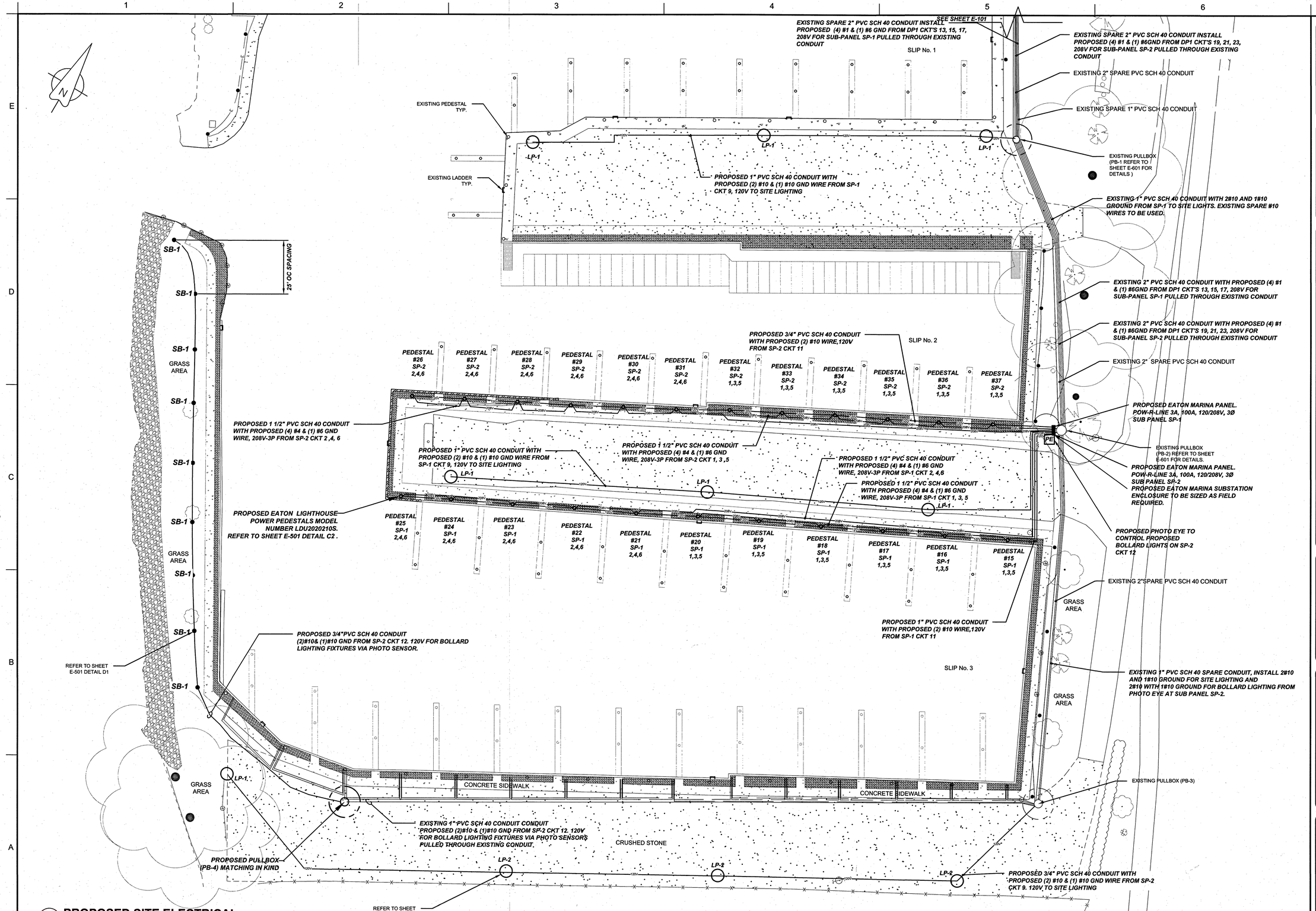

A1 **PROPOSED SITE ELECTRICAL**
SCALE: 1" = 20' 0"

Nussbaumer & Clarke, Inc.
ENGINEERS AND SURVEYORS
3556 Lake Shore Road, Suite 500 | Buffalo, NY 14219
(716) 827-8000 | (716) 826-7958 fax
www.nussclarke.com
Erie | Niagara | Chautauqua | Cattaraugus

GRATWICK RIVERSIDE PARK MARINA 2016 RENOVATIONS

ELECTRICAL PROPOSED SITE PLAN

REVISIONS

No.	DESCRIPTION	DATE

NUSSBAUMER & CLARKE, INC.
A CORPORATION REGISTERED TO PRACTICE PROFESSIONAL ENGINEERING & LAND SURVEYING IN THE STATE OF NEW YORK

NUSSBAUMER AND CLARKE INCORPORATED 1933 BUFFALO, N.Y. SEAL

UNAUTHORIZED ALTERATION OR ADDITION TO THIS ENGINEERING DRAWING IS A VIOLATION OF SECTION 7209. PROVISION 2 OF THE NEW YORK STATE EDUCATION LAW.

PROJECT NUMBER	15J1-0185
DATE	JUNE 2016
DRAWN BY	FJT
DESIGNED BY	FJT
CHECKED BY	JEZ
APPROVED BY	MTM
SCALE:	1" = 20' 0"
	= 1 INCH
DRAWING No.	11 OF 14

E-103

I:\2015\15J1-0185 gratwick marina\08b working drawings\Discipline\E-Electrical\E-101, E-102 ELECTRICAL SITE PLAN.dwg 6/10/2016 DOTT

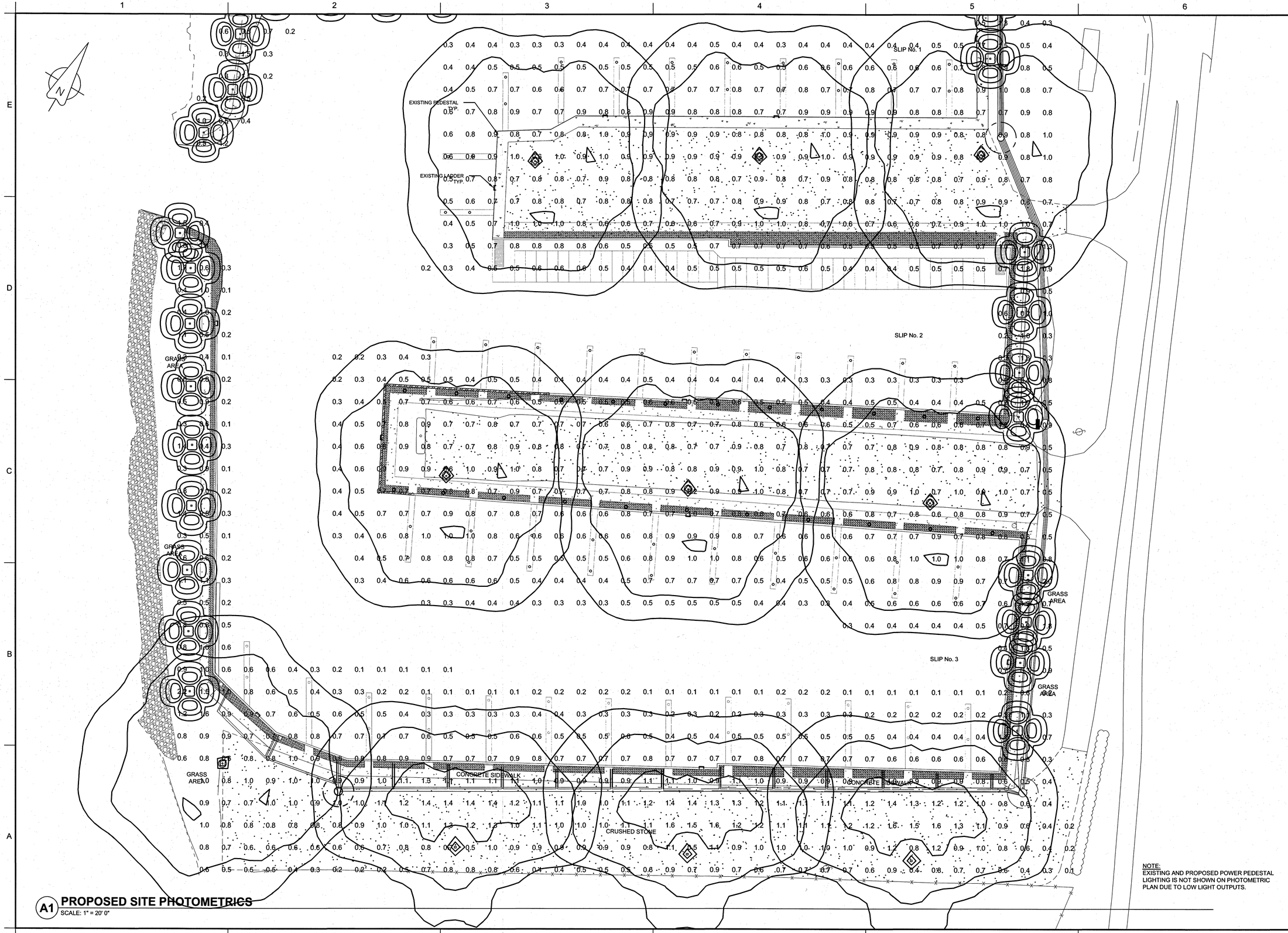

A1 PROPOSED SITE PHOTOMETRICS
SCALE: 1" = 20' 0"

NOTE:
EXISTING AND PROPOSED POWER PEDESTAL LIGHTING IS NOT SHOWN ON PHOTOMETRIC PLAN DUE TO LOW LIGHT OUTPUTS.

Nussbaumer & Clarke, Inc.
ENGINEERS AND SURVEYORS
3556 Lake Shore Road, Suite 500 | Buffalo, NY 14219
(716) 827-8000 | (716) 826-7958 fax
www.nussclarke.com
Erie | Niagara | Chautauqua | Cattaraugus

GRATWICK RIVERSIDE PARK MARINA 2016 RENOVATIONS

ELECTRICAL SITE LIGHT PHOTOMETRICS

REVISIONS

No.	DESCRIPTION	DATE

NUSSBAUMER & CLARKE, INC.
A CORPORATION REGISTERED TO PRACTICE PROFESSIONAL ENGINEERING & LAND SURVEYING IN THE STATE OF NEW YORK

NUSSBAUMER AND CLARKE, INC. INCORPORATED 1933 BUFFALO, N.Y. SEAL

UNAUTHORIZED ALTERATION OR ADDITION TO THIS ENGINEERING DRAWING IS A VIOLATION OF SECTION 7209, PROVISION 2 OF THE NEW YORK STATE EDUCATION LAW.

PROJECT NUMBER	15J1-0185
DATE	JUNE 2016
DRAWN BY	FJT
DESIGNED BY	FJT
CHECKED BY	JEZ
APPROVED BY	MTM
SCALE:	1" = 20' 0"
	= 1 INCH
DRAWING No.	12 OF 14

E-104

E:\2015\15J1-0185 gratwick marina\06b working drawings\Discipline\E-Electrical\E-101, E-102 ELECTRICAL SITE PLAN.dwg 6/10/2016 DOTT

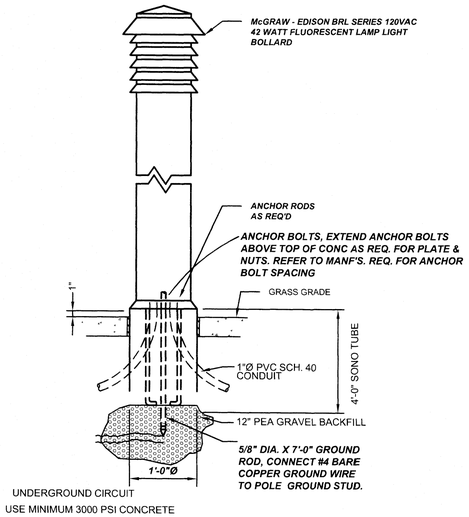

D1 LIGHTED BOLLARD
SCALE: N.T.S

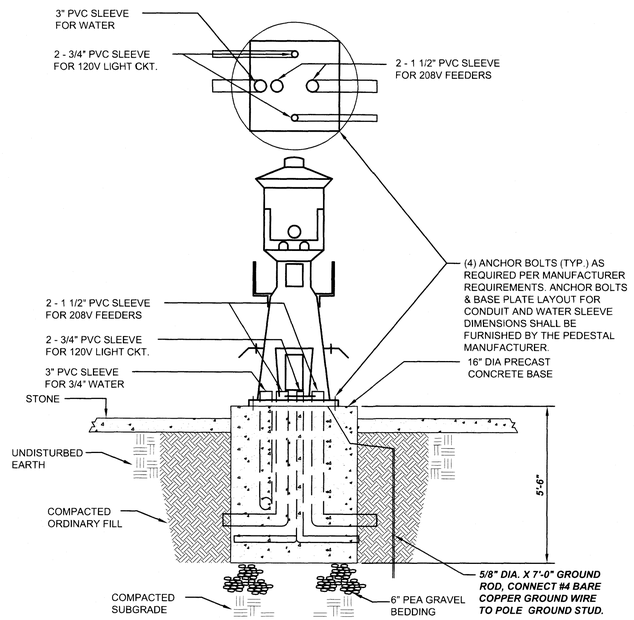

C2 MARINA POWER PEDESTAL
SCALE: N.T.S

***NOTE:* MODEL NUMBER LDU 2020210S**
PROPOSED EATON LIGHTHOUSE POWER PEDESTALS TO MATCH EXISTING POWER PEDESTALS.
PEDESTALS TO BE EQUIPPED WITH
(1) 250A BUS BAR
(1) 20A/125V GFI RECEPTACLE
(2) 30A L5 120V LOCKABLE RECEPTACLES
(1) LED LIGHT CONTROLLED BY A PHOTO EYE
(2) 30A AND (1) 20A GFCI SINGLE POLE BREAKER
(2) SILLCOCK'S WITH (1) HOSE CONNECTION VACUUM BREAKER PER SILLCOCK CONFORMING TO ASSE 1011 BY CONTRACTOR.
(2) WATER CONNECTION, DUAL 3/4" BALL VALVE

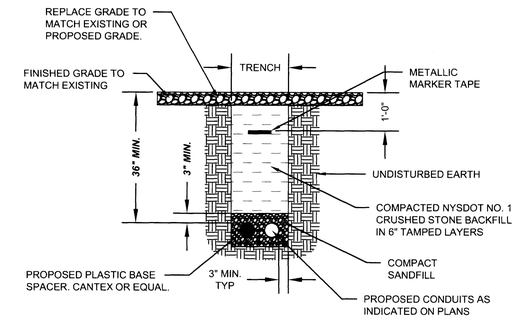

D5 DUCTBANK DETAIL
SCALE: N.T.S

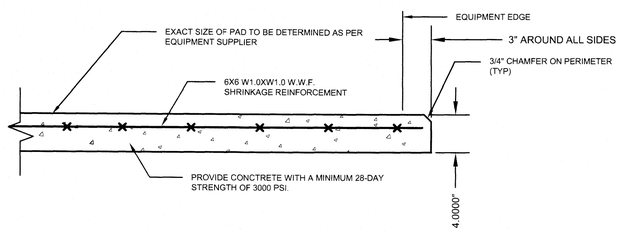

B1 HOUSE KEEPING PAD FOR EATON PANEL ENCLOSURE
SCALE: N.T.S

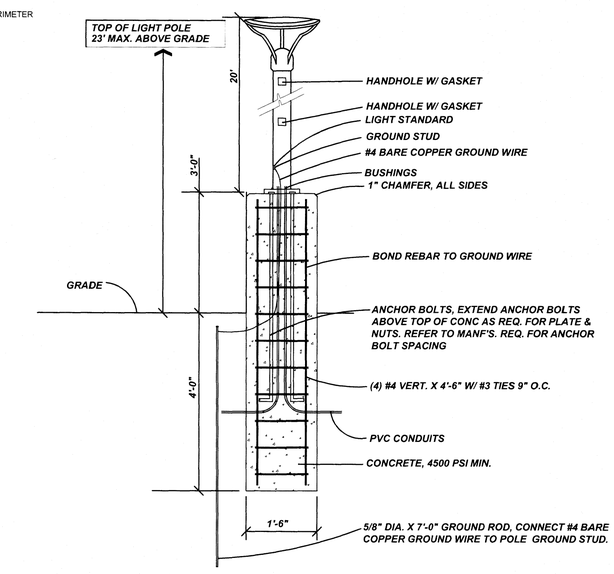

A3 EXTERIOR POLE FOUNDATION DETAIL
SCALE: N.T.S.

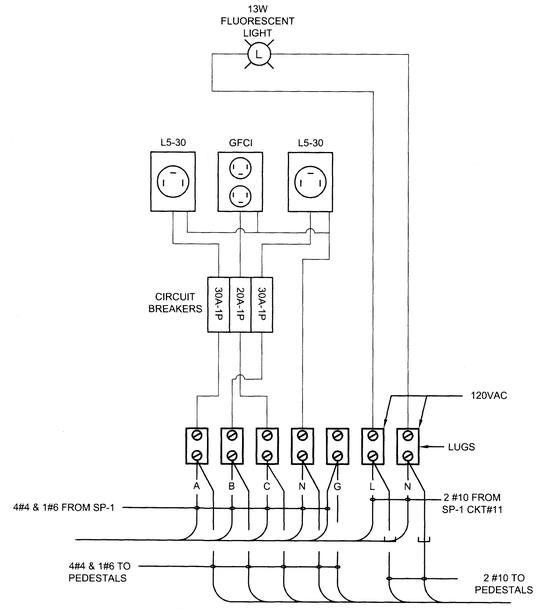

A4 PEDESTAL WIRING DIAGRAM
SCALE: N.T.S

NOTE:

PEDESTAL NUMBER	PHASE BREAKER
15,18	A-30 B-30 C-20
16,19	A-30 B-20 C-30
17,20	A-20 B-30 C-30

TYPICAL ALTERNATION OF ALL PROPOSED PEDESTALS.

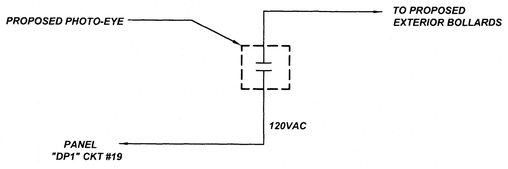

A1 WIRING DIAGRAM OF PROPSED PHOTOEYE CONTROL
SCALE: N.T.S

Nussbaumer & Clarke, Inc.
ENGINEERS AND SURVEYORS
3556 Lake Shore Road, Suite 500 | Buffalo, NY 14219
(716) 827-8000 | (716) 826-7958 fax
www.nussclarke.com
Erie | Niagara | Chautauqua | Cattaraugus

GRATWICK RIVERSIDE PARK MARINA 2016 RENOVATIONS

ELECTRICAL DETAILS

REVISIONS

No.	DESCRIPTION	DATE

NUSSBAUMER & CLARKE, INC.
A CORPORATION REGISTERED TO PRACTICE PROFESSIONAL ENGINEERING & LAND SURVEYING IN THE STATE OF NEW YORK

NUSSBAUMER AND CLARKE INC. INCORPORATED 1933 BUFFALO, N.Y. SEAL

UNAUTHORIZED ALTERATION OR ADDITION TO THIS ENGINEERING DRAWING IS A VIOLATION OF SECTION 7209. PROVISION 2 OF THE NEW YORK STATE EDUCATION LAW.

PROJECT NUMBER	15J1-0185
DATE	JUNE 2016
DRAWN BY	FJT
DESIGNED BY	FJT
CHECKED BY	JEZ
APPROVED BY	MTM
SCALE:	AS NOTED
	= 1 INCH
DRAWING No.	13 OF 14

E-501

I:\2015\15J1-0185 gratwick marina\0Bb working drawings\Discipline\E-Electrical\E-501 ELECTRICAL DETAILS.dwg 6/10/2016 DOTT

EXISTING DP-1	120/208 VOLTS 3 ø 4 WIRE 42 CIRCUIT ☒ LUGS ONLY ☐ MAIN BKR 225 AMP MAINS COPPER							
	DESCRIPTION	BKR	L1	L2	L3	BKR	DESCRIPTION	
1	LIGHTS - RESTROOMS, HALLS, EXTERIOR	20A-1P						2
3	LIGHTS - JANITOR ROOM	20A-1P				30A-2P	SPARE	4
5	RECEPTACLES - JANITORS ROOM	20A-1P				20A-1P	HAND DRYER - MENS ROOM	6
7	GFCIS - RESTROOMS	20A-1P				20A-1P	HAND DRYER - WOMENS ROOM	8
9	120V ELECTRONIC FAUCET SYSTEM	20A-1P						10
11	***BOLLARD LIGHTING***	***20A-1P***				60A-2P	TANKLESS WATER HEATER	12
13								14
15	***SUB FEED TO SUB PANEL SP-1***					20A-2P	BASEBOARD HEATER - MENS ROOM	16
17		***100A-3P***						18
19						20A-2P	BASEBOARD HEATER - WOMENS ROOM	20
21	***SUB FEED TO SUB PANEL SP-2***							22
23		***100A-3P***				20A-2P	BASEBOARD HEATER JANITOR ROOM	24
25	SPARE							26
27	SPARE					30A-2P	TANKLESS WATER HEATER	28
29	SPARE							30
31						60A-2P	PEDESTAL #'S 1-8	32
33	SUB FEED TO SECTION #2							34
35		100A-3P				60A-2P	PEDESTAL #'S 7-12	36
37	SUMP	20A-1P				20A-1P	SPARE	38
39	BOLLARD LIGHTING	20A-1P				20A-1P	SPARE	40
41	ROAD SIGN	20A-1P				20A-1P	SPARE	42
	TOTAL CONNECTED AMPS/LEG						TOTAL CONNECTED KVA	

NOTE

RELOCATE BREAKER 17 TO POSITION 11.
BREAKERS TO SUB FEED PANEL SP-1 AND SP-2 TO BE EQUIP WITH GROUND FAULT PROTECTION BREAKERS PER NEC 555.3

EXISTING DP-1.1	120/208 VOLTS 3 ø 4 WIRE 42 CIRCUIT ☒ LUGS ONLY ☐ MAIN BKR 100 AMP MAINS COPPER							
	DESCRIPTION	BKR	L1	L2	L3	BKR	DESCRIPTION	
43	SLIP 3 - PEDESTAL #'S 1-7					20A-1P	SPARE	44
45		60A-2P				20A-1P	SPARE	46
47	SLIP 3 - PEDESTAL #'S 8-14					20A-1P	SPARE	48
49		60A-2P				20A-1P	SPARE	50
51	SPARE	20A-1P				20A-1P	SPARE	52
53	SPARE	20A-1P				20A-1P	SPARE	54
55	SPARE	20A-1P				20A-1P	SPARE	56
57	SPARE	20A-1P				20A-1P	SPARE	58
59	SPARE	20A-1P				20A-1P	SPARE	60
61	SPARE	20A-1P				20A-1P	SPARE	62
63	SPARE	20A-1P				20A-1P	SPARE	64
65	SPARE	20A-1P				20A-1P	SPARE	66
67	SPARE	20A-1P				20A-1P	SPARE	68
69	SPARE	20A-1P				20A-1P	SPARE	70
71	SPARE	20A-1P				20A-1P	SPARE	72
73	SPARE	20A-1P				20A-1P	SPARE	74
75	SPARE	20A-1P				20A-1P	SPARE	76
77	SPARE	20A-1P				20A-1P	SPARE	78
79	SPACE					20A-1P	SPARE	80
81	SPACE					20A-1P	SPARE	82
83	SPACE						SPACE	84
	TOTAL CONNECTED AMPS/LEG						TOTAL CONNECTED KVA	

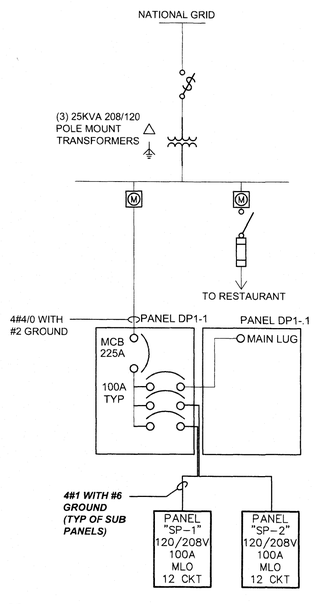

A1 PROPOSED ONE LINE DIAGRAM
SCALE: N.T.S.

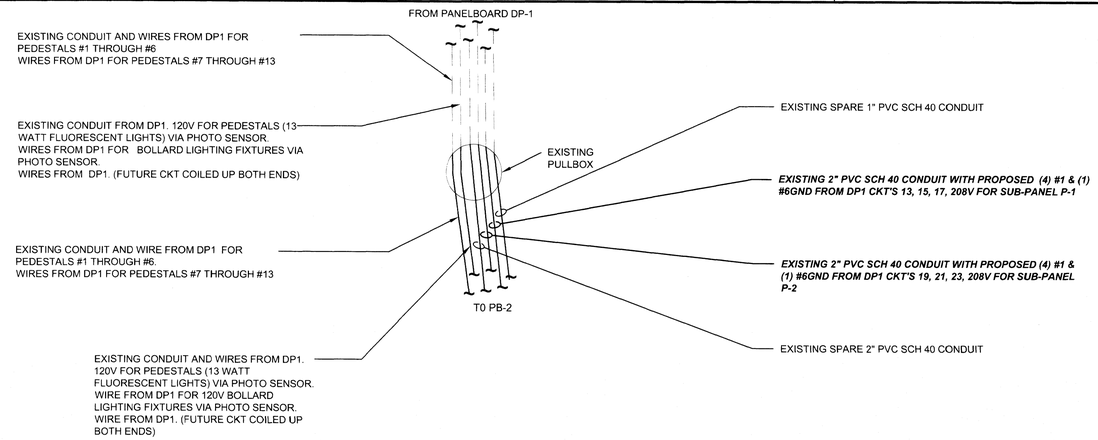

D4 ENLARGED VIEW "PULLBOX 1"
SCALE: N.T.S.

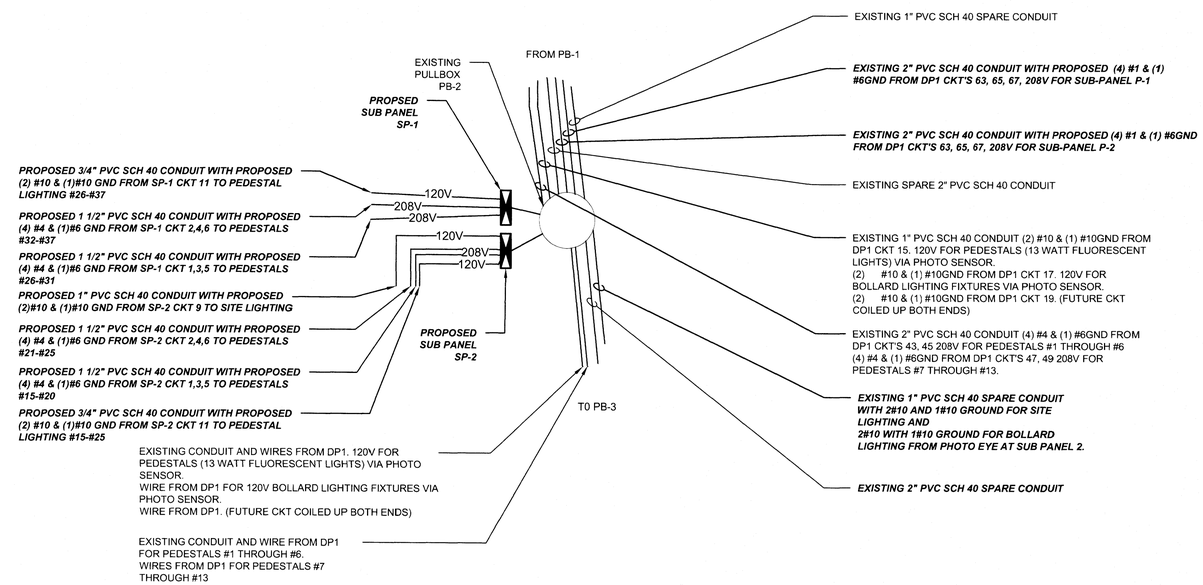

B4 ENLARGED VIEW "PULLBOX 2"
SCALE: N.T.S.

PROPOSED SP-1	120/208 VOLTS 3 ø 4 WIRE 12 CIRCUIT ☒ LUGS ONLY ☐ MAIN BKR 100 AMP MAINS COPPER							
	DESCRIPTION	BKR	L1	L2	L3	BKR	DESCRIPTION	
1								2
3	SLIP 2 - PEDESTAL #'S 15-20						SLIP 2 - PEDESTAL #'S 21-25	4
5		60A-3P				60A-3P		6
7		20A-1P				20A-1P		8
9	SITE LIGHTING	20A-1P				20A-1P		10
11	PEDESTAL LIGHTING	20A-1P				20A-1P		12
	TOTAL CONNECTED AMPS/LEG						TOTAL CONNECTED KVA	

PROPOSED SP-2	120/208 VOLTS 3 ø 4 WIRE 12 CIRCUIT ☒ LUGS ONLY ☐ MAIN BKR 100 AMP MAINS COPPER							
	DESCRIPTION	BKR	L1	L2	L3	BKR	DESCRIPTION	
1								2
3	SLIP 2 - PEDESTAL #'S 26-31						SLIP 2 - PEDESTAL #'S 32-37	4
5		60A-3P				60A-3P		6
7		20A-1P				20A-1P	BOLLARD LIGHTS	8
9	SITE LIGHTING	20A-1P				20A-1P		10
11	PEDESTAL LIGHTING	20A-1P				20A-1P		12
	TOTAL CONNECTED AMPS/LEG						TOTAL CONNECTED KVA	

Nussbaumer & Clarke, Inc.
ENGINEERS AND SURVEYORS
3556 Lake Shore Road, Suite 500 | Buffalo, NY 14219
(716) 827-8000 | (716) 826-7958 fax
www.nussclarke.com
Erie | Niagara | Chautauqua | Cattaraugus

GRATWICK RIVERSIDE PARK MARINA 2016 RENOVATIONS

ELECTRICAL ONE LINE, PANEL SCHEDULES, AND DETAILS

REVISIONS

No.	DESCRIPTION	DATE

NUSSBAUMER & CLARKE, INC.
A CORPORATION REGISTERED TO PRACTICE PROFESSIONAL ENGINEERING & LAND SURVEYING IN THE STATE OF NEW YORK

UNAUTHORIZED ALTERATION OR ADDITION TO THIS ENGINEERING DRAWING IS A VIOLATION OF SECTION 7209. PROVISION 2 OF THE NEW YORK STATE EDUCATION LAW.

PROJECT NUMBER	15J1-0185
DATE	JUNE 2016
DRAWN BY	FJT
DESIGNED BY	FJT
CHECKED BY	JEZ
APPROVED BY	MTM
SCALE:	AS NOTED
	= 1 INCH
DRAWING No.	14 OF 14

E-601

I:\2015\15J1-0185 gratwick marina\08b working drawings\Discipline\E-Electrical\E-601 ONE LINE AND PANEL SCHEDULES.dwg 6/10/2016 DOTT